GÜHRING

GM 300

TOOLHOLDERS AND CLAMPING DEVICES

EDITION GM01

GM 300

HIGH CLAMPING FORCE

PERFECT CONCENTRICITY

MAXIMUM OPERATIONAL SAFETY

OPTIMAL COOLANT DELIVERY

FROM THE SPINDLE TO THE CUTTING EDGE

INNOVATIONS FOR THE METAL-CUTTING INDUSTRY

MODULAR TOOL HOLDERS FROM THE TOOL MANUFACTURER'S PERSPECTIVE!

DECADES OF OUR KNOWLEDGE & EXPERIENCE OFFERED TO YOU!

HOLDERS PERFECTLY ADAPTED TO SUIT THE DEMANDS OF MODERN TOOLS!

GUHRING

ORDERING

When ordering, please always state
Order no., i.e.:
„HMC 3000 hydraulic chucks
for small clamping diameters HSK-A50,
for shank Ø 3mm“ **= 4618 3.050**

Order no.

HSK-A hydraulic chucks HMC 3000 for clamping small diameters

								Article no.	4618
HSK-A d_3	for shank Ø $d_{1\ h6}$ mm	d_2 mm	d_4 mm	l_1 mm	l_2 mm	l_5 mm	SW		Order no.
32	3	28	40.0	84.0	34	33	4		**4618 3.032**
32	4	28	40.0	84.0	34	33	4		**4618 4.032**
32	5	28	40.0	84.0	34	33	4		**4618 5.032**
40	3	28	33.5	74	34	40	4		**4618 3.040**
40	4	28	33.5	74	34	40	4		**4618 4.040**
40	5	28	33.5	74	34	40	4		**4618 5.040**
50	3	28	40	74	34	32	4		**4618 3.050**
50	4	28	40	74	34	32	4		**4618 4.050**
50	5	28	40	74	34	32	4		**4618 5.050**
63	3	28	50	74	34	29.5	5		**4618 3.063**
63	4	28	50	74	34	29.5	5		**4618 4.063**
63	5	28	50	74	34	29.5	5		**4618 5.063**
100	3	28	50	79	34	30	5		**4618 3.100**
100	4	28	50	79	34	30	5		**4618 4.100**
100	5	28	50	79	34	30	5		**4618 5.100**

GÜHRING

GM 300

TOOLHOLDERS AND CLAMPING DEVICES

EDITION GM01

The publishers cannot be held responsible for any errors, omissions or changes of any kind.
All products marked with “DIN“, deviating from the dimensions listed in the catalogue, can be delivered, as long as they are in conformity with the DIN standard form.

Printed in Germany • 2019

Gühring KG
Herderstraße 50-54
D-72458 Albstadt
Germany

Tel.: +49 74 31 17-0
Fax: +49 74 31 17-21 279

Internet: www.guehring.de
E-Mail: info@guehring.de

GÜHRING

GM 3000

GÜHRING

WE SET THE STANDARDS FOR THE FUTURE

DEVELOPMENT OF THE HSK INTERFACE, PIONEER OF FINE MACHINING

MQL TECHNOLOGY "FROM THE SPINDLE TO THE CUTTING EDGE"

HSK

GÜHRING

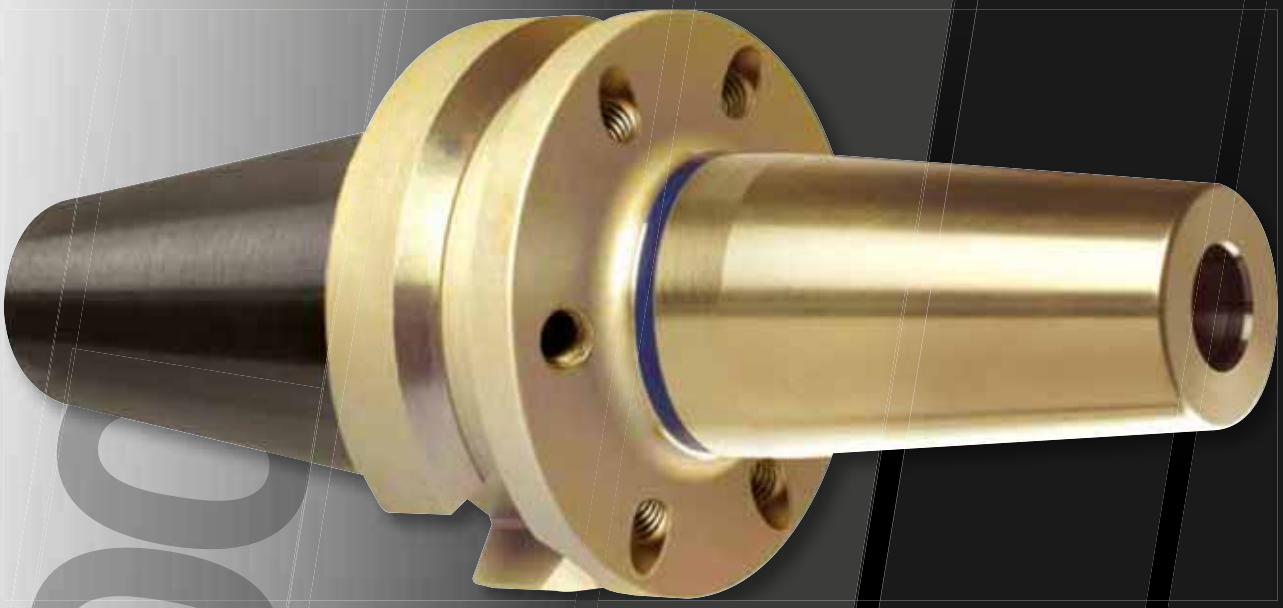

TSG 3000

- HIGH OPERATING SAFETY THANKS TO TEMPERATURE INDICATOR
- PVD-COATING FOR LONG TOOL LIFE

DEVELOPMENTS NEVER BEEN SEEN BEFORE.

GÜHRING

HMC3000

GÜHRO SYNC

TOOLS FROM Ø 3MM
DIRECT HYDRAULIC
CLAMPING

THE ADVANTAGES OF
HYDRAULIC CHUCK &
SYNCHRO CHUCK IN
ONE TOOL HOLDER

GÜHRING

MQL

GÜHRING MQL SYSTEMS

DELIVERING ONLY THE REQUIRED AMOUNT

GÜHRING

As one of the pioneers of MQL technology we have an extensive knowledge of minimal quantity lubrication. Gühring standard MQL chucks have been supplied a thousand fold throughout the world and are recognised by the automotive industry as ideal MQL solutions as either the one or two channel systems.

Higher cutting speeds and longer tool life are possible thanks to adapted cooling as well as highest surface qualities thanks to the pure lubricant. Workpieces and chips remain dry! Save the cost of de-greasing your workpieces as well as disposal of swarf and soluble oil.

1 MQL BY GÜHRING

Our products for the MQL 1-channel technology are identified by this symbol.

Visual feature of the 1-channel system
is the gold coloured MQL length setting screw.

2 MQL BY GÜHRING

Our products for the MQL 2-channel technology are identified by this symbol.

Visual feature of the 2-channel system
is the black coloured MQL length setting screw.

GÜHRING

HYDRAULIC CHUCKS

from page	13
Chucks	16
Reduction bushes	26
Accessories	28

SHRINK FIT TECHNOLOGY

from page	33
Chucks	36
Extensions	49
Accessories	50
Shrink-fit systems	56

TAPPING CHUCKS

from page	71
Synchro-chucks	76
Quick-change chucks	88

MQL-TECHNOLOGY

from page	91
MQL	93
MQL 1-channel	97
MQL 2-channel	114
MQL HSK clamping technology	140
MQL technology	147

HPC CLAMPING CHUCKS

from page	153
Chucks	157
Clamping sleeves	161

TOOL HOLDERS

from page	165
Side lock holders	168
Collet holders	177
NC drilling chucks	189
Shell milling arbors	191
Shell milling arbors	195
Semi-finished products	199

HOLDERS FOR FINE MACHINING

from page	201
Module 6x6	204
Module 4x4	210
Floating holders	216

HSK CLAMPING TECHNOLOGY

from page	223
GühroClamp MQL-4-point clamping sets	226
M-contour clamping sets for MQL and IC	231
4-point clamping sets for conventional cooling	234
PowerClamp sets	244

MEASURING TOOLS AND GENERAL ACCESSORIES

from page	255
Measuring and inspection instruments HSK	256
Measuring and inspection instruments spindle holders	258
Measuring and inspection instruments cooling lubrication	261
General accessories	263

TECHNICAL INFORMATION

from page	273
Overview tool holders	274
HSK	276
Shrink fit technology	284
Hydraulic chucks	286
Installation dimensions for HSK adaptors	288
Article no. index	290

SYSTEM FINDER

		ISO taper	MAS/BT
HMC 3000/ Hydraulic chucks		**4619** HMC 3000, p. 22 **4213** with increased clamping force, p. 23	**4620** HMC 3000, p. 24 **4221** with increased clamping force, p. 25
TSG 3000/ Shrink fit chucks		**4727** TSG 3000, p. 43 **4738**, p. 44 **4729** GÜHROJET with peripherical cooling, p. 46	**4728** TSG 3000, p. 47 **4739**, p. 48
HPC clamping chucks		**4301**, p. 157 **4243** CAT, p. 158	**4244** MAS/BT, p. 158
Side lock holders ”Weldon“/”Whistle-Notch“		**4317** GÜHROJET Weldon, p. 172 **4322** Whistle-Notch, p. 173	**4234** GÜHROJET Weldon, p. 174 **4233** Whistle-Notch, p. 175
NC drilling chucks		**4242** GÜHROJET, p. 190	**4240** GÜHROJET, p. 190
Collet holders ER		**4318**, p. 182	**4245**, p. 182
GÜHROSYNC Tapping chucks, Quick change tapping chucks		* **4576**, p. 77 * **4525**, p. 79 * **4342** Quick change tapping chucks with straight shank, p. 89	* **4577**, p. 78 * **4525**, p. 79 * **4342** Quick change tapping chucks with straight shank, p. 89

* combined with appropriate side lock holder or basic adaptor

HSK-A	HSK-C	HSK-E
4618 HMC 3000, p. 16 **4299** with increased clamping force, p. 17 **4296** with radial length setting, p. 19	**4267** with increased clamping force, p. 20 **4295** with radial length setting, p. 21	
4726 TSG 3000, p. 36 **4736**, p. 37 **4755** GÜHROJET, p. 40	**4758**, p. 41	**4737**, p. 42
4300, p. 157		
4232 GÜHROJET Weldon, p. 168 **4329** Weldon, p. 169 **4334** Whistle-Notch, p. 170	**4333** Whistle-Notch, p. 171	
4346 GÜHROJET, p. 189		
4304, p. 177 **4324** sealed, p. 178	**4303**, p. 179 **4323** sealed, p. 180	**4397**, p. 181
4601, p. 76 **4525**, p. 79 * **4328** Quick-change tapping chuck with IC, p. 89	**4601**, p. 76 **4525**, p. 79 * **4328** Quick-change tapping chuck with IC, p. 89	

HMC 3000
MICRO-PRECI-
SION DRILLS
HR 500

PERFECT CLAMPING

HMC 3000 HYDRAULIC CHUCKS TOGETHER WITH SOLID CARBIDE MICRO-PRECISION DRILLS OR HR 500 HIGH-PERFORMANCE REAMERS

- direct hydraulic clamping of shanks from Ø 3 mm
- quick, simple and accurate length setting
- perfect concentricity R < 3 µm with 10 x d1

Please request our "HMC 3000", "HR 500" and "solid carbide micro-precision drills" brochures.

HMC 3000

HYDRAULIC CHUCKS

HMC 3000

EXTREMELY FAST
EXTREMELY ACCURATE
EXTREMELY SMALL

DIRECT HYDRAULIC CLAMPING OF TOOLS FROM Ø 3 MM

HIGH-SPEED MACHINING

PERFECT CONCENTRICITY R < 3 µM WITH 10 X D1

HSK-A hydraulic chucks HMC 3000 for clamping small diameters

Product information

- perfect concentricity: < 3 µm at 10xd1
- balancing quality: G2.5 / 25.000 rev./min or U< 1 gmm
- HSK-A to ISO 12164-1/DIN 69893-1
- high clamping force
- quick, simple handling and accurate length setting (only from the front)
- IC and GÜHROJET peripheral cooling ensure optimal chip evacuation and tool lubrication

Scope of delivery

- incl. length adjustment screw
- incl. hexagon chuck key, article no. 4912
- order coolant supply set, article no. 4949, separately
- sealed version available as special option

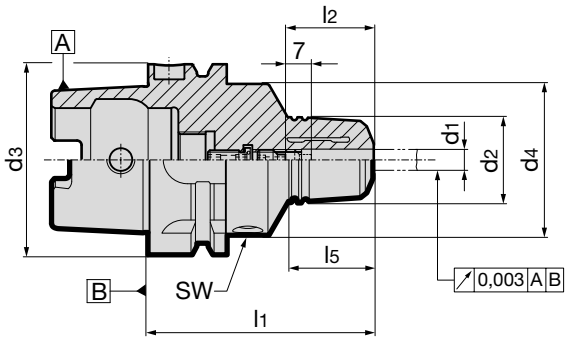

GÜHROJET

								Article no.	4618
HSK-A d_3	for shank Ø d_1 h6 mm	d_2 mm	d_4 mm	l_1 mm	l_2 mm	l_5 mm	SW		Order no.
32	3	28	40.0	84.0	34	33	4		**4618 3.032**
32	4	28	40.0	84.0	34	33	4		**4618 4.032**
32	5	28	40.0	84.0	34	33	4		**4618 5.032**
40	3	28	33.5	74	34	40	4		**4618 3.040**
40	4	28	33.5	74	34	40	4		**4618 4.040**
40	5	28	33.5	74	34	40	4		**4618 5.040**
50	3	28	40	74	34	32	4		**4618 3.050**
50	4	28	40	74	34	32	4		**4618 4.050**
50	5	28	40	74	34	32	4		**4618 5.050**
63	3	28	50	74	34	29.5	5		**4618 3.063**
63	4	28	50	74	34	29.5	5		**4618 4.063**
63	5	28	50	74	34	29.5	5		**4618 5.063**
100	3	28	50	79	34	30	5		**4618 3.100**
100	4	28	50	79	34	30	5		**4618 4.100**
100	5	28	50	79	34	30	5		**4618 5.100**

HSK-A hydraulic chucks with increased clamping force

Product information

- balancing quality: G2.5 / 25,000 rev./min or U< 1 gmm
- axial length setting
- max. deviation f. concentricity 3 µm
- for tool shank tolerance h6
- to DIN 69882-7
- also available in extra-long lengths l1 = 150 / 160 mm (concentricity 5 µm) and 200 mm (concentricity 7 µm)
- HSK-A to ISO 12164-1/DIN 69893-1

Scope of delivery

- incl. adjustment screw, article no. 4900
- incl. hexagon chuck key, article no. 4912
- order coolant supply set, article no. 4949, separately

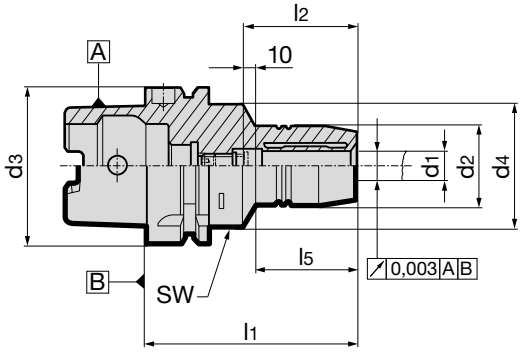

HSK-A d_3	for shank Ø d_1 h6 mm	d_2 mm	d_4 mm	l_1 mm	l_2 mm	l_5 mm	incl. setting screw 4900 … …	SW	kg	Article no. 4299 Order no.
32	6	26	40.0	80	37	29	6.014	4	0.44	**4299 6.032**
32	8	28	40.0	80	37	29	8.014	4	0.40	**4299 8.032**
32	10	30	40.0	85	41	35	8.014	4	0.40	**4299 10.032**
32	12	32	40.0	90	46	40	8.014	4	0.40	**4299 12.032**
40	6	26	33.5	70	37	36	6.014	4	0.60	**4299 6.040**
40	8	28	33.5	70	37	36	8.014	4	0.60	**4299 8.040**
40	10	30	33.5	75	41	42	8.014	4	0.60	**4299 10.040**
40	12	32	33.5	80	46	48	8.014	4	0.60	**4299 12.040**
50	6	26	40.0	70	37	28	6.014	4	0.80	**4299 6.050**
50	8	28	40.0	70	37	28	8.014	4	0.80	**4299 8.050**
50	10	30	40.0	75	41	34	10.014	4	0.80	**4299 10.050**
50	12	32	40.0	85	46	44	12.014	4	0.80	**4299 12.050**
50	14	34	40.0	85	46	44	12.014	4	0.80	**4299 14.050**
50	16	38	53.0	90	49	30	16.014	5	1.10	**4299 16.050**
50	18	40	57.0	90	49	30	16.014	5	1.10	**4299 18.050**
50	20	42	60.0	90	51	29	20.114	5	1.10	**4299 20.050**
63	6	26	50.0	70	37	24.5	6.014	5	1.00	**4299 6.063**
63	8	28	50.0	70	37	24.5	8.014	5	1.00	**4299 8.063**
63	10	30	50.0	80	41	35.5	10.014	5	1.00	**4299 10.063**
63	12	32	50.0	85	46	41.5	12.014	5	1.10	**4299 12.063**
63	14	34	50.0	85	46	41.5	12.014	5	1.10	**4299 14.063**
63	16	38	50.0	90	49	45.5	16.014	5	1.20	**4299 16.063**
63	18	40	50.0	90	49	48.5	16.014	5	1.20	**4299 18.063**
63	20	42	50.0	90	51	47.5	20.114	5	1.20	**4299 20.063**
63	25	57	63.0	120	57	55.3	20.114	6	2.10	**4299 25.063**
63	32	64	75.0	125	61	63	20.114	6	2.40	**4299 32.063**
63	6	26	50.0	150	37	103	6.014	5	1.50	**4299 6.163**
63	8	28	50.0	150	37	104	8.014	5	1.50	**4299 8.163**
63	10	30	50.0	150	41	104	10.014	5	1.50	**4299 10.163**
63	12	32	50.0	150	46	105	12.014	5	1.50	**4299 12.163**
63	14	34	50.0	150	46	105	12.014	5	1.70	**4299 14.163**
63	16	38	50.0	150	49	106	16.014	5	1.80	**4299 16.163**
63	18	40	50.0	150	49	107	16.014	5	1.90	**4299 18.163**
63	20	42	50.0	150	51	108	20.114	5	1.90	**4299 20.163**
63	6	26	50.0	200	37	153	6.014	5	1.70	**4299 6.263**
63	8	28	50.0	200	37	154	8.014	5	1.70	**4299 8.263**
63	10	30	50.0	200	41	154	10.014	5	1.80	**4299 10.263**
63	12	32	50.0	200	46	155	12.014	5	1.80	**4299 12.263**
63	14	34	50.0	200	46	155	12.014	5	2.00	**4299 14.263**
63	16	38	50.0	200	49	156	16.014	5	2.20	**4299 16.263**

HSK-A hydraulic chucks with increased clamping force

HSK-A d_3	for shank Ø $d_{1\ h6}$ mm	d_2 mm	d_4 mm	l_1 mm	l_2 mm	l_5 mm	incl. setting screw 4900 … …	SW	kg	Article no. 4299 Order no.
63	18	40	50.0	200	49	157	16.014	5	2.30	**4299 18.263**
63	20	42	50.0	200	51	158	20.114	5	2.50	**4299 20.263**
80	6	26	50.0	70	37	24	6.014	5	1.50	**4299 6.080**
80	8	28	50.0	70	37	24	8.014	5	1.50	**4299 8.080**
80	10	30	50.0	80	41	35	10.014	5	1.50	**4299 10.080**
80	12	32	50.0	85	46	40	12.014	5	1.60	**4299 12.080**
80	14	34	50.0	85	46	40	12.014	5	1.60	**4299 14.080**
80	16	38	50.0	95	49	51	16.014	5	1.70	**4299 16.080**
80	18	40	50.0	95	49	51	16.014	5	1.80	**4299 18.080**
80	20	42	50.0	95	51	52	20.114	5	1.80	**4299 20.080**
80	25	57	63.0	110	57	65	20.114	6	2.60	**4299 25.080**
80	32	64	75.0	125	61	63	20.114	6	3.20	**4299 32.080**
100	6	26	50.0	75	37	26	6.014	5	2.40	**4299 6.100**
100	8	28	50.0	75	37	26	8.014	5	2.40	**4299 8.100**
100	10	30	50.0	90	41	42	10.014	5	2.50	**4299 10.100**
100	12	32	50.0	95	46	47	12.014	5	2.50	**4299 12.100**
100	14	34	50.0	95	46	47	12.014	5	2.50	**4299 14.100**
100	16	38	50.0	100	49	53	16.014	5	2.70	**4299 16.100**
100	18	40	50.0	100	49	53	16.014	5	2.70	**4299 18.100**
100	20	42	50.0	105	51	59	20.114	5	3.20	**4299 20.100**
100	25	57	63.0	110	57	62	20.114	6	3.30	**4299 25.100**
100	32	64	75.0	110	61	62	20.114	6	3.80	**4299 32.100**
100	6	26	50.0	160	37	104	6.014	5	2.80	**4299 106.100**
100	8	28	50.0	160	37	104	8.014	5	2.80	**4299 108.100**
100	10	30	50.0	160	41	105	10.014	5	2.90	**4299 110.100**
100	12	32	50.0	160	46	105	12.014	5	2.90	**4299 112.100**
100	14	34	50.0	160	46	107	12.014	5	2.90	**4299 114.100**
100	16	38	50.0	160	49	107	16.014	5	3.20	**4299 116.100**
100	18	40	50.0	160	49	108	16.014	5	3.20	**4299 118.100**
100	20	42	50.0	160	51	108	20.114	5	3.60	**4299 120.100**
100	25	57	63.0	160	57	110	20.114	6	3.70	**4299 125.100**
100	32	64	75.0	160	61	110	20.114	6	4.20	**4299 132.100**
100	6	26	50.0	200	37	144	6.014	5	3.00	**4299 206.100**
100	8	28	50.0	200	37	144	8.014	5	3.00	**4299 208.100**
100	10	30	50.0	200	41	145	10.014	5	3.10	**4299 210.100**
100	12	32	50.0	200	46	145	12.014	5	3.10	**4299 212.100**
100	14	34	50.0	200	46	147	12.014	5	3.10	**4299 214.100**
100	16	38	50.0	200	49	147	16.014	5	3.40	**4299 216.100**
100	18	40	50.0	200	49	148	16.014	5	3.40	**4299 218.100**
100	20	42	50.0	200	51	148	20.114	5	3.80	**4299 220.100**
100	25	57	63.0	200	57	150	20.114	6	3.90	**4299 225.100**
100	32	64	75.0	200	61	150	20.114	6	4.40	**4299 232.100**

HSK-A hydraulic chucks with radial length setting

Product information

- balancing quality: G2.5 / 25,000 rev./min or U< 1 gmm
- robust, radially operated length setting
- max. deviation f. concentricity 3 µm
- for tool shank tolerance h6
- to DIN 69882-7
- HSK-A to ISO 12164-1/DIN 69893-1

Scope of delivery

- incl. hexagon chuck key, article no. 4912
- incl. hexagon key inserts for radial length setting
- order coolant supply set, article no. 4949, separately
- MQL design available as an option

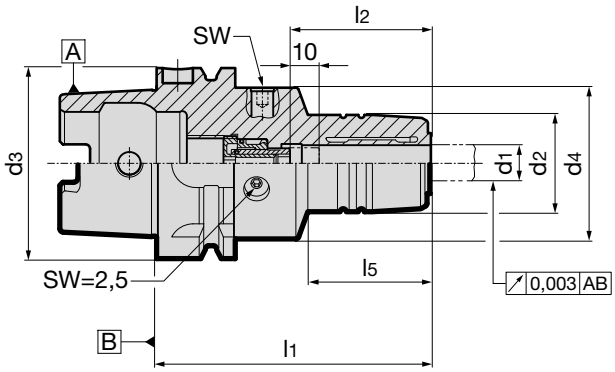

HSK-A d_3	for shank Ø d_1 h6 mm	d_2 mm	d_4 mm	l_1 mm	l_2 mm	l_5 mm	SW	kg	Article no. 4296 Order no.
50	6	26	40	80	37	35	4	0.80	**4296 6.050**
50	8	28	40	80	37	36	4	0.80	**4296 8.050**
50	10	30	40	85	41	38	4	0.90	**4296 10.050**
50	12	32	40	90	46	43	4	0.90	**4296 12.050**
50	14	34	40	90	46	46	4	1.00	**4296 14.050**
50	16	38	53	95	49	36.5	5	1.20	**4296 16.050**
50	18	40	57	95	49	36.5	5	1.20	**4296 18.050**
50	20	42	60	100	51	39	5	1.30	**4296 20.050**
63	6	26	50	80	37	33	5	1.00	**4296 6.063**
63	8	28	50	80	37	33	5	1.10	**4296 8.063**
63	10	30	50	85	41	38	5	1.10	**4296 10.063**
63	12	32	50	90	46	40	5	1.20	**4296 12.063**
63	14	34	50	90	46	46	5	1.20	**4296 14.063**
63	16	38	50	95	49	51	5	1.30	**4296 16.063**
63	18	40	50	95	49	52	5	1.30	**4296 18.063**
63	20	42	50	100	51	58	5	1.40	**4296 20.063**
63	25	57	63	120	57	59.5	6	2.30	**4296 25.063**
63	32	64	75	125	61	62.5	6	2.30	**4296 32.063**
80	6	26	50	85	37	35	5	1.50	**4296 6.080**
80	8	28	50	85	37	36	5	1.50	**4296 8.080**
80	10	30	50	90	41	38	5	1.50	**4296 10.080**
80	12	32	50	95	46	46	5	1.60	**4296 12.080**
80	14	34	50	95	46	47	5	1.60	**4296 14.080**
80	16	38	50	100	49	53	5	1.60	**4296 16.080**
80	18	40	50	100	49	54	5	1.80	**4296 18.080**
80	20	42	50	105	51	58	5	1.80	**4296 20.080**
80	25	57	63	115	57	66	6	2.60	**4296 25.080**
80	32	64	75	125	61	63	6	2.60	**4296 32.080**
100	6	26	50	85	37	33	5	2.50	**4296 6.100**
100	8	28	50	85	37	33	5	2.70	**4296 8.100**
100	10	30	50	90	41	36	5	2.80	**4296 10.100**
100	12	32	50	95	46	40	5	2.80	**4296 12.100**
100	14	34	50	95	46	46	5	2.70	**4296 14.100**
100	16	38	50	100	49	51	5	2.90	**4296 16.100**
100	18	40	50	100	49	52	5	2.80	**4296 18.100**
100	20	42	50	105	51	58	5	3.20	**4296 20.100**
100	25	57	63	115	57	60	6	3.40	**4296 25.100**
100	32	64	75	120	61	68	6	3.40	**4296 32.100**

HSK-C hydraulic chucks with increased clamping force

Product information

- balancing quality: G2.5 / 25,000 rev./min or U< 1 gmm
- axial length setting
- for tool shank tolerance h6
- HSK-C to ISO 12164-1/DIN 69893-1
- HSK-C32: with gripper groove, tapped hole for coolant supply set and bore for data chip

Scope of delivery

- incl. adjustment screw, article no. 4900
- incl. hexagon chuck key, article no. 4912

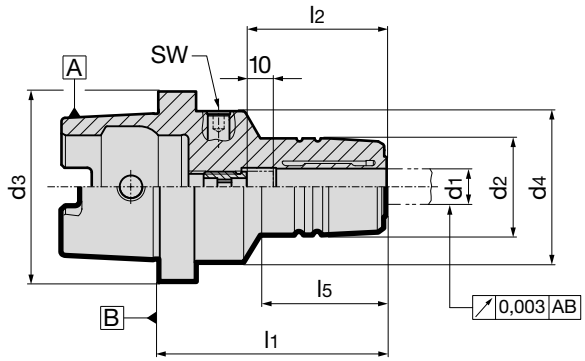

HSK-C d_3	for shank Ø d_1 h6 mm	d_2 mm	d_4 mm	l_1 mm	l_2 mm	l_5 mm	incl. setting screw 4900 …	SW	kg	Article no. 4267 Order no.
32	6	26	32	65	37.5	33	6.014	4	0.4	**4267 6.032**
32	8	28	32	67	37.5	34	8.014	4	0.4	**4267 8.032**
32	10	30	32	72.7	42.5	39	8.014	4	0.4	**4267 10.032**
32	12	31.5	32	76	46	45	8.014	4	0.4	**4267 12.032**
40	6	26	40	60	37	35	6.014	4	0.4	**4267 6.040**
40	8	28	40	60	37	36	8.014	4	0.4	**4267 8.040**
40	10	30	40	65	41	41	8.014	4	0.5	**4267 10.040**
40	12	32	40	70	46	47	8.014	4	0.6	**4267 12.040**
50	6	26	50	60	37	30	6.014	5	0.7	**4267 6.050**
50	8	28	50	60	37	30	8.014	5	0.7	**4267 8.050**
50	10	30	50	65	41	35	10.014	5	0.7	**4267 10.050**
50	12	32	50	75	46	44	12.014	5	0.8	**4267 12.050**
50	14	34	50	75	46	46	12.014	5	0.7	**4267 14.050**
50	16	38	50	80	49	51	16.014	5	0.8	**4267 16.050**
50	18	40	50	80	49	51	16.014	5	1.5	**4267 18.050**
50	20	42	50	80	51	52	20.114	5	1.2	**4267 20.050**
63	6	26	50	60	37	25	6.014	5	1.0	**4267 6.063**
63	8	28	50	60	37	26	8.014	5	1.0	**4267 8.063**
63	10	30	50	65	41	31	10.014	5	1.0	**4267 10.063**
63	12	32	50	75	46	41	12.014	5	1.1	**4267 12.063**
63	14	34	50	75	46	42	12.014	5	1.0	**4267 14.063**
63	16	38	50	80	49	48	16.014	5	1.1	**4267 16.063**
63	18	40	50	80	49	48	16.014	5	1.2	**4267 18.063**
63	20	42	50	80	51	49	20.114	5	1.2	**4267 20.063**
63	25	57	63	95	57	63	20.114	6	2.0	**4267 25.063**
63	32	62.5	75	100	61	60.3	20.114	6	2.0	**4267 32.063**

HSK-C hydraulic chucks with radial length adjustment

Product information

- balancing quality: G2.5 / 25,000 rev./min or U< 1 gmm
- robust, radially operated length setting
- max. deviation f. concentricity 3 µm
- for tool shank tolerance h6
- to DIN 69882-7
- HSK-C to ISO 12164-1/DIN 69893-1

Scope of delivery

- incl. hexagon chuck key, article no. 4912
- incl. hexagon key inserts for radial length setting

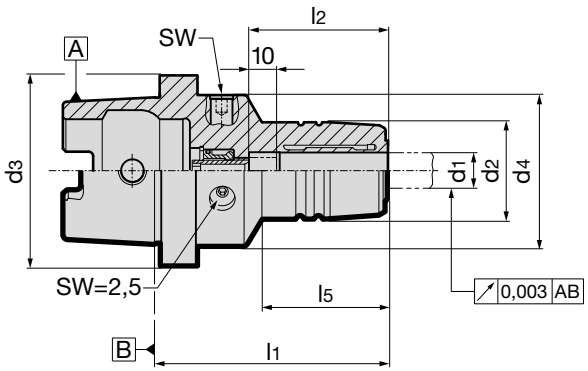

Article no. 4295

HSK-C d_3	for shank Ø d_1 h6 mm	d_2 mm	d_4 mm	l_1 mm	l_2 mm	l_5 mm	SW	kg	Order no.
40	6	26	40	60	37	30	4	0.5	**4295 6.040**
40	8	28	40	60	37	30	4	0.5	**4295 8.040**
40	10	30	40	65	41	35	4	0.5	**4295 10.040**
40	12	32	40	70	46	40	4	0.6	**4295 12.040**
50	6	26	50	60	37	30	4	0.6	**4295 6.050**
50	8	28	50	60	37	30	5	0.6	**4295 8.050**
50	10	30	50	65	41	35.5	5	0.6	**4295 10.050**
50	12	32	50	75	46	45	5	0.8	**4295 12.050**
50	14	34	50	75	46	45	5	0.9	**4295 14.050**
50	16	38	50	80	49	50	5	0.9	**4295 16.050**
50	18	40	50	80	49	50	5	1.0	**4295 18.050**
50	20	42	50	80	51	50	5	1.0	**4295 20.050**
63	6	26	50	60	37	26.0	5	1.0	**4295 6.063**
63	8	28	50	60	37	26.0	5	1.1	**4295 8.063**
63	10	30	50	65	41	32.0	5	1.1	**4295 10.063**
63	12	32	50	75	46	42.5	5	1.1	**4295 12.063**
63	14	34	50	75	46	43.0	5	1.1	**4295 14.063**
63	16	38	50	80	49	49.0	5	1.2	**4295 16.063**
63	18	40	50	80	49	50.0	5	1.2	**4295 18.063**
63	20	42	50	80	51	50.5	5	1.2	**4295 20.063**
63	25	50	63	95	57	59.5	6	1.8	**4295 25.063**
63	32	60	63	100	61	60.0	6	2.3	**4295 32.063**

ISO taper hydraulic chucks HMC 3000 for clamping small diameters

Product information

- perfect concentricity: < 3 µm at 10xd1
- balancing quality: G2.5 / 25,000 rev./min or U< 1 gmm
- ISO taper to DIN ISO 7388-1 form AD/AF
- high clamping force
- quick, simple handling and accurate length setting
- IC and GÜHROJET peripheral cooling ensure optimal chip evacuation and tool lubrication

Scope of delivery

- incl. length adjustment screw
- incl. hexagon chuck key, article no. 4912
- order pull studs, article no. 4925 or 4926, separately
- sealed version available as special option

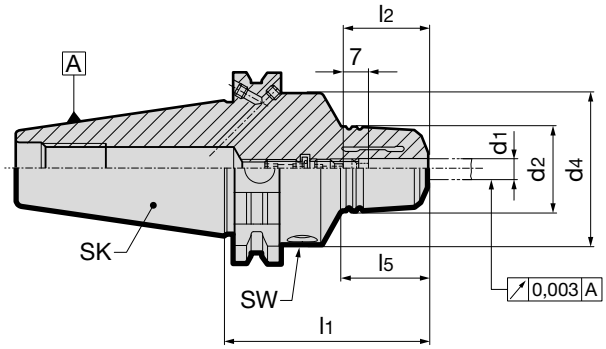

GÜHROJET

	Article no.	4619

ISO taper	for shank Ø $d_{1\ h6}$ mm	d_2 mm	d_4 mm	l_1 mm	l_2 mm	l_5 mm	SW	Order no.
40	3	28.0	49.5	84.5	34.0	34.0	5	**4619 3.040**
40	4	28.0	49.5	84.5	34.0	34.0	5	**4619 4.040**
40	5	28.0	49.5	84.5	34.0	34.0	5	**4619 5.040**

ISO taper hydraulic chucks with increased clamping force

Product information

- ISO taper to DIN ISO 7388-1 form AD/AF
- form AF supplied with threaded pins in bores
- balancing quality: G2.5 / 25,000 rev./min or U< 1 gmm
- axial length setting
- for tool shank tolerance h6

Scope of delivery

- incl. adjustment screw, article no. 4900
- incl. hexagon chuck key, article no. 4912
- order pull studs, article no. 4925 or 4926, separately

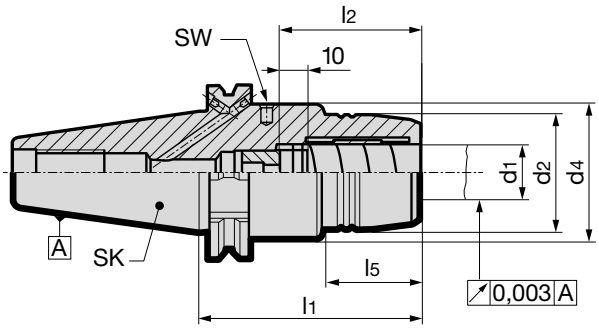

ISO taper	for shank Ø $d_{1\ h6}$ mm	d_2 mm	d_4 mm	l_1 mm	l_2 mm	l_5 mm	incl. setting screw 4900 …	SW	kg	Article no. 4213 Order no.
40	6	26.0	49.5	80.5	37	29.5	6.014	5	1.5	**4213 6.040**
40	8	28.0	49.5	80.5	37	30.0	8.014	5	1.5	**4213 8.040**
40	10	30.0	49.5	80.5	41	31.0	10.014	5	1.5	**4213 10.040**
40	12	32.0	49.5	80.5	46	31.5	12.014	5	1.5	**4213 12.040**
40	14	34.0	49.5	80.5	46	31.5	12.014	5	1.5	**4213 14.040**
40	16	38.0	49.5	80.5	49	33.0	16.014	5	1.5	**4213 16.040**
40	18	40.0	49.5	80.5	49	33.0	16.014	5	1.5	**4213 18.040**
40	20	49.5	49.5	64.5	51	34.0	20.114	5	1.5	**4213 20.040**
40	20	42.0	49.5	80.5	51	34.0	20.114	5	1.5	**4213 20.140**
40	20	42.0	49.5	110.0	51	34.0	20.114	5	2.0	**4213 20.240**
40	25	49.5	49.5	80.5	57	-	20.114	6	2.0	**4213 25.040**
40	32	63.0	80.0	80.5	61	25.5	20.114	6	2.0	**4213 32.040**
50	12	32.0	49.5	80.5	46	31.5	12.014	5	3.5	**4213 12.050**
50	20	42.0	49.5	80.5	51	34.0	20.114	5	4.0	**4213 20.050**
50	20	42.0	49.5	110.0	51	34.0	20.114	5	4.0	**4213 20.150**
50	32	72.0	72.0	81.0	61	-	20.114	6	4.0	**4213 32.050**

MAS/BT hydraulic chucks HMC 3000 for clamping small diameters

Product information

- perfect concentricity: < 3 µm at 10xd1
- balancing quality: G2.5 / 25,000 rev./min or U< 1 gmm
- MAS/BT to DIN ISO 7388-2 form JD/JF (form AD/B)
- BT30 design JD without coolant supply via collar
- high clamping force
- quick, simple handling and accurate length setting
- IC and GÜHROJET peripheral cooling ensure optimal chip evacuation and tool lubrication

Scope of delivery

- incl. length adjustment screw
- incl. hexagon chuck key, article no. 4912

- order pull studs, article no. 4927 or 4928, separately
- sealed version available as special option

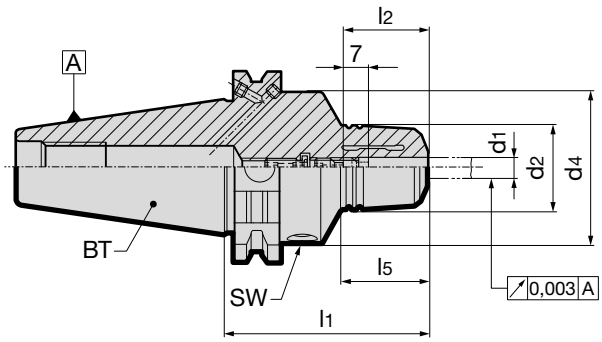

GÜHROJET

BT	for shank Ø $d_{1\ h6}$ mm	d_2 mm	d_4 mm	l_1 mm	l_2 mm	l_5 mm	SW	Article no. 4620 Order no.
30	3	28.0	28.0	55.0	34	-	4	**4620 3.030**
30	4	28.0	28.0	55.0	34	-	4	**4620 4.030**
30	5	28.0	28.0	55.0	34	-	4	**4620 5.030**
40	3	28.0	44.5	94.0	34	48.5	5	**4620 3.040**
40	4	28.0	44.5	94.0	34	48.5	5	**4620 4.040**
40	5	28.0	44.5	94.0	34	48.5	5	**4620 5.040**

MAS/BT hydraulic chucks with increased clamping force

Product information

- balancing quality: G2.5 / 25,000 rev./min or U< 1 gmm
- axial length setting
- max. deviation f. concentricity 3 µm
- for tool shank tolerance h6
- MAS/BT to JIS B 6339-2 form JD/JF (*: version JD without coolant supply over collar)

Scope of delivery

- incl. adjustment screw, article no. 4900
- incl. hexagon chuck key, article no. 4912
- order pull studs, article no. 4927 or 4928, separately

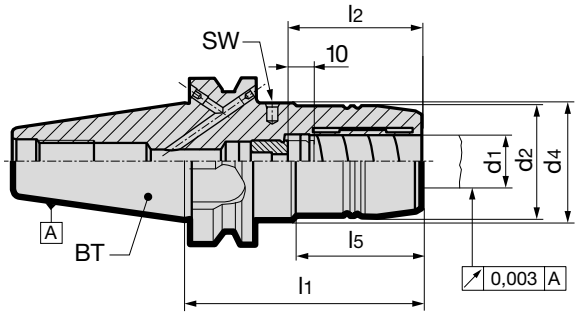

BT	for shank Ø $d_{1\ h6}$ mm	d_2 mm	d_4 mm	l_1 mm	l_2 mm	l_5 mm	incl. setting screw 4900 …	SW	kg	Article no. 4221 Order no.
30	6	26.0	26.0	51.0	37	-	6.014	4	0.6	**4221 6.030**
30	8	28.0	28.0	51.0	37	-	8.014	4	0.6	**4221 8.030**
30	10	30.0	30.0	51.0	41	-	10.014	4	0.6	**4221 10.030**
30	12	32.0	32.0	51.0	46	19.5	12.014	4	0.6	**4221 12.030**
30	16	38.0	38.0	90.0	49	50	16.014	4	1.0	**4221 16.030**
30	20	42.0	42.0	90.0	51	50	8.014	5	1.0	**4221 20.030**
40	6	26.0	44.5	90.0	37	43.0	6.014	5	1.5	**4221 6.040**
40	8	28.0	44.5	90.0	37	44.5	8.014	5	1.5	**4221 8.040**
40	10	30.0	44.5	90.0	41	44.5	10.014	5	1.5	**4221 10.040**
40	12	32.0	44.5	90.0	46	44.5	12.014	5	1.5	**4221 12.040**
40	14	34.0	44.5	90.0	46	44.5	12.014	5	1.5	**4221 14.040**
40	16	38.0	44.5	90.0	49	47.5	16.014	5	1.5	**4221 16.040**
40	18	40.0	44.5	90.0	49	47.5	16.014	5	1.5	**4221 18.040**
40	20	49.5	49.5	72.5	51	-	20.114	5	1.5	**4221 20.040**
40	20	42.0	44.5	90.0	51	47.5	20.114	5	1.5	**4221 20.140**
40	25	49.5	49.5	83.0	57	-	20.114	6	1.8	**4221 25.040**
40	32	63.0	80.0	83.0	61	25.5	20.114	6	2.0	**4221 32.040**
50	12	32.0	44.5	90.0	46	34.0	12.014	5	4.0	**4221 12.050**
50	20	42.0	44.5	90.0	51	34.0	20.114	5	4.0	**4221 20.050**
50	32	72.0	72.0	90.0	61	-	20.114	6	4.0	**4221 32.050**

Reduction bushes, sealed, for hydraulic chucks

Product information

- for clamping smaller shank-Ø in hydraulic chucks
- clamping-Ø for tool shank tolerance h6
- closed endface, therefore leakproof up to 80 bar
- concentricity ≤ 2 µm
- with adjustable limit stop
- the application of reduction bushes makes it possible to increase the permissible transferable torque by approx. 25% in comparsion to direct clamping

Scope of delivery

- incl. stop element
- special dimensions on request

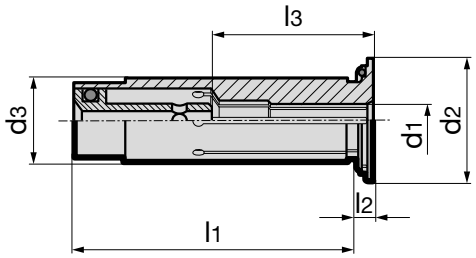

					Article no.	4368
d_1 mm	for shank Ø $d_{3\ h6}$ mm	d_2 mm	l_1 mm	l_2 mm	l_3 mm	Order no.
12	3	16.5	45	2	25.5	**4368 3.012**
12	4	16.5	45	2	25.5	**4368 4.012**
12	5	16.5	45	2	25.5	**4368 5.012**
12	6	16.5	45	2	33.5	**4368 6.012**
12	8	16.5	45	2	33.5	**4368 8.012**
20	3	24.1	50.5	2	28.5	**4368 3.020**
20	4	24.1	50.5	2	28.5	**4368 4.020**
20	5	24.1	50.5	2	28.5	**4368 5.020**
20	6	24.1	50.5	2	37.5	**4368 6.020**
20	7	24.1	50.5	2	37.5	**4368 7.020**
20	8	24.1	50.5	2	37.5	**4368 8.020**
20	9	24.1	50.5	2	42.5	**4368 9.020**
20	10	24.1	50.5	2	42.5	**4368 10.020**
20	11	24.1	50.5	2	42.5	**4368 11.020**
20	12	24.1	50.5	2	47.5	**4368 12.020**
20	13	24.1	50.5	2	47.5	**4368 13.020**
20	14	24.1	50.5	2	47.5	**4368 14.020**
20	15	24.1	50.5	2	47.5	**4368 15.020**
20	16	24.1	50.5	2	47.5	**4368 16.020**
32	6	35.5	60.5	2	34.5	**4368 6.032**
32	8	35.5	60.5	2	34.5	**4368 8.032**
32	10	35.5	60.5	2	39.5	**4368 10.032**
32	12	35.5	60.5	2	41.5	**4368 12.032**
32	14	35.5	60.5	2	41.5	**4368 14.032**
32	16	35.5	60.5	2	49.5	**4368 16.032**
32	18	35.5	60.5	2	49.5	**4368 18.032**
32	20	35.5	60.5	2	49.5	**4368 20.032**
32	25	35.5	60.5	2	57.5	**4368 25.032**

GÜHROJET reduction bushes for hydraulic chucks with cooling

Product information

- for clamping smaller shank-Ø in hydraulic chucks
- clamping-Ø for tool shank tolerance h6
- with coolant slots for peripheral cooling, therefore process and tool life improvement
- concentricity ≤ 2 µm
- with adjustable limit stop
- the application of reduction bushes makes it possible to increase the permissible transferable torque by approx. 25% in comparsion to direct clamping

Scope of delivery

- incl. stop element
- special dimensions on request

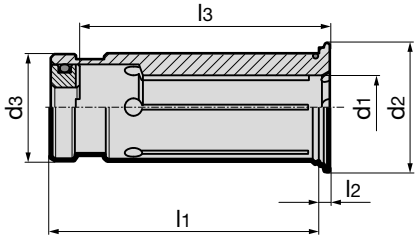

GÜHROJET

					Article no.	4369
d_1 mm	for shank Ø $d_{3\ h6}$ mm	d_2 mm	l_1 mm	l_2 mm	l_3 mm	Order no.
12	3	16.5	45	2	25.5	4369 3.012
12	4	16.5	45	2	25.5	4369 4.012
12	5	16.5	45	2	25.5	4369 5.012
12	6	16.5	45	2	33.5	4369 6.012
12	8	16.5	45	2	33.5	4369 8.012
20	3	24.1	50.5	2	28.5	4369 3.020
20	4	24.1	50.5	2	28.5	4369 4.020
20	5	24.1	50.5	2	28.5	4369 5.020
20	6	24.1	50.5	2	37.5	4369 6.020
20	7	24.1	50.5	2	37.5	4369 7.020
20	8	24.1	50.5	2	37.5	4369 8.020
20	9	24.1	50.5	2	42.5	4369 9.020
20	10	24.1	50.5	2	42.5	4369 10.020
20	11	24.1	50.5	2	42.5	4369 11.020
20	12	24.1	50.5	2	47.5	4369 12.020
20	13	24.1	50.5	2	47.5	4369 13.020
20	14	24.1	50.5	2	47.5	4369 14.020
20	15	24.1	50.5	2	47.5	4369 15.020
20	16	24.1	50.5	2	47.5	4369 16.020
32	6	35.5	60.5	2	34.5	4369 6.032
32	8	35.5	60.5	2	34.5	4369 8.032
32	10	35.5	60.5	2	39.5	4369 10.032
32	12	35.5	60.5	2	41.5	4369 12.032
32	14	35.5	60.5	2	41.5	4369 14.032
32	16	35.5	60.5	2	49.5	4369 16.032
32	18	35.5	60.5	2	49.5	4369 18.032
32	20	35.5	60.5	2	49.5	4369 20.032
32	25	35.5	60.5	2	57.5	4369 25.032

Extraction key for reduction bushes

Product information
- for article no. 4368 and 4369
- for the simple removal of reduction bushes

	Article no.	4099
for reduction bushes d_1		Order no.
12 to 32		4099 1.000

Senso 3000

Product information
- accurate, quick and simple measuring of the clamping force of hydraulic chucks
- mobility allows measuring within machines and fixtures
- determines clamping force via a pressure sensitive plug gauge
- display of absolute measuring value or percentage clamping force in relation to reference value

Scope of delivery
- incl. carbide proofing bar for determining the torque
- incl. type CR 2430 battery
- incl. sturdy case

	Article no.	4038
clamping diameter mm	kg	Order no.
6.0	1.1	4038 6.000
8.0	1.1	4038 8.000
10.0	1.3	4038 10.000
12.0	1.3	4038 12.000
14.0	1.3	4038 14.000
16.0	1.3	4038 16.000
18.0	1.5	4038 18.000
20.0	1.5	4038 20.000
25.0	2.0	4038 25.000
32.0	2.5	4038 32.000

Universal HSK length pre-setting adaptors

Product information

- for application with pre-setting facilities for the accurate length pre-setting of axially adjustable chucks.
- thanks to precise clamping also suitable for measuring and setting the diameter.
- HSK to ISO 12164-1/DIN 69893-1

Scope of delivery

- order plug insert, article no. 4993, separately

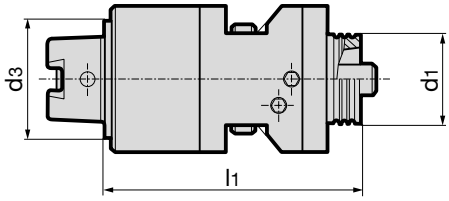

				Article no.	4316
HSK-C d_3	for HSK-A/C/E d_1	d_2 mm	l_1 mm		Order no.
63	50	38	104.6		**4316 63.050**
63	63	48	111.6		**4316 63.063**

Universal ISO taper length pre-setting adaptors

Product information

- for application with pre-setting facilities for the accurate length pre-setting of axially adjustable chucks.
- thanks to precise clamping also suitable for measuring and setting the diameter.

Scope of delivery

- order plug insert, article no. 4993, separately

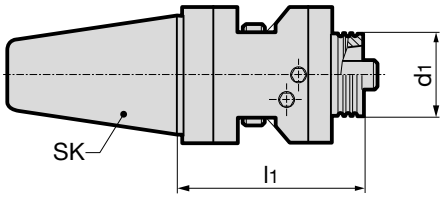

				Article no.	4319
SK	for HSK-A/C/E d_1	d_2 mm	l_1 mm		Order no.
40	50	38	99.3		**4319 40.050**
40	63	48	106.3		**4319 40.063**
50	32	24	90.5		**4319 50.032**
50	40	30	93.8		**4319 50.040**
50	50	38	99.3		**4319 50.050**
50	63	48	106.3		**4319 50.063**
50	100	75	128.3		**4319 50.100**

Design features
of the universal length pre-setting adaptor

- tool length pre-setting via an external adjustment wheel
- tool length optimally pre-set in the universal length pre-setting adaptor via HSK clamping system similar to a tool spindle.
- controlling concentricity of cutting edges and simultaneous axial length pre-setting possible on pre-setting adaptor.
- applicable are tool holders such as hydraulic chucks, collet holders, side lock holders DIN 1835 E
- access hole in taper not required, all HSK forms from HSK-A to HSK-F can be applied.
- axial length pre-setting via plug insert set, article no. 4993.
- if a radial rotation of your pre-setting equipment is not possible, a rotatable version of the universal length pre-setting adaptor is available (on request).
- cannot be applied for cutting operations.
- not necessary to remove coolant supply.

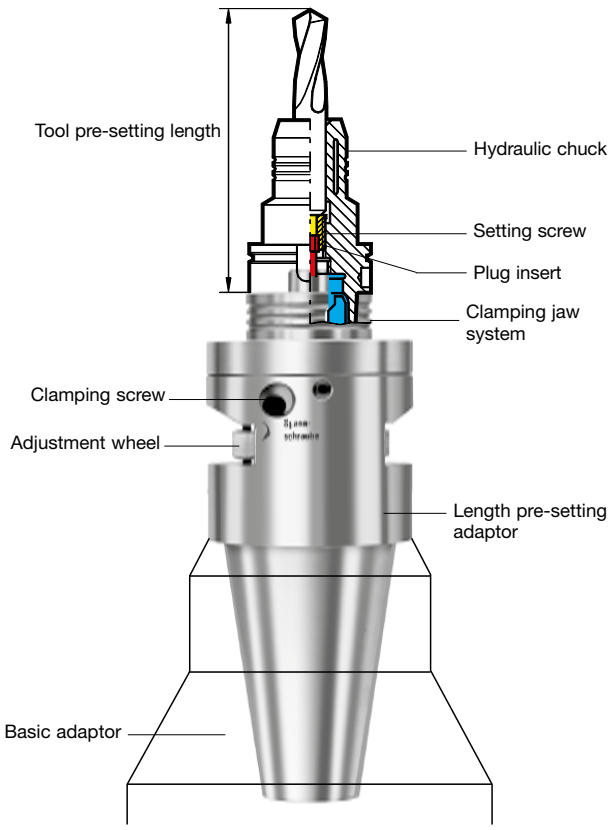

ISO taper length pre-setting adaptor

Product information
- application without removal of coolant supply
- simple design with radial clamping for measuring tool length
- for the application on pre-setting equipment for precise length pre-setting of axially adjustable chucks

Scope of delivery
- incl. taper insert, article no. 4992
- order separately: plug inserts, article no. 4993

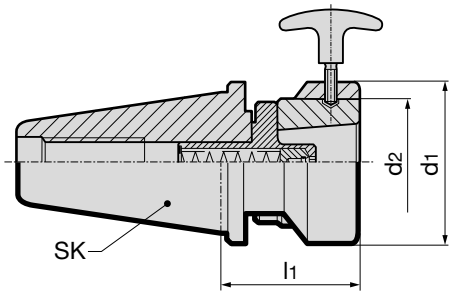

				Article no.	4315
ISO taper	for HSK-A/C/E	d_1 mm	d_2 mm	l_1 mm	Order no.
40	32	80	63	68.2	**4315 40.032**
40	40	80	63	68.2	**4315 40.040**
40	50	80	63	68.2	**4315 40.050**
40	63	80	63	68.2	**4315 40.063**
50	25	80	63	68.2	**4315 50.025**
50	32	80	63	68.2	**4315 50.032**
50	40	80	63	68.2	**4315 50.040**
50	50	80	63	68.2	**4315 50.050**
50	63	80	63	68.2	**4315 50.063**
50	80	120	100	88.2	**4315 50.080**
50	100	120	100	88.2	**4315 50.100**

Plug inserts

Product information
- for length pre-setting adaptors, art. no. 4316, 4319 and 4315

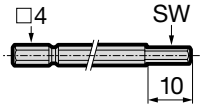

		Article no.	4993
for HSK	Set with key sizes	Order no.	
C	2.5/3/4/5/6	**4993 100.000**	
A/E	2.5/3/4/5/6	**4993 200.000**	
A (for MQL)	3/4/5	**4993 300.000**	

Taper inserts

Product information
- for length pre-setting adaptor, article no. 4315

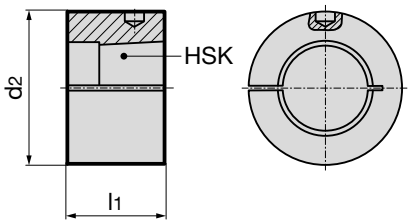

			Article no.	4992
for HSK-A/C/E	d_2 mm	l_1 mm	Order no.	
25	63	40	**4992 25.000**	
32	63	40	**4992 32.000**	
40	63	40	**4992 40.000**	
50	63	40	**4992 50.000**	
63	63	40	**4992 63.000**	
80	100	55	**4992 80.000**	
100	100	55	**4992 100.000**	

Clamping screws for hydraulic chucks and hydraulic synchro tapping chucks

Product information

- replacement clamping screws for hydraulic chucks and hydraulic synchro tapping chucks
- activation screw spec. for hydraulic chucks to suit hex. key size
- torque max.10 Nm

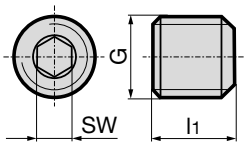

Article no. 4241

G	l_1 mm	SW	Order no.
M8	8.5	4.0	4241 8.001
M8	10.0	4.0	4241 8.000
M10	9.0	5.0	4241 10.003
M10	10.5	5.0	4241 10.001
M10	12.0	5.0	4241 10.002
M12	12.0	6.0	4241 12.000

Adjustment screws

Product information

- for hydraulic chucks
- for conventional internal cooling
- with facing stop for standard shank ends
- for HSK 32/40 with clamping-Ø 10.0 and 12.0 mm use order no. 8.014

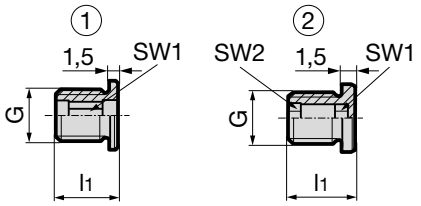

Article no. 4900

for clamping-Ø	l_1 mm	G	SW1	SW2	figure	Order no.
6	14	M5	2.5	-	1	4900 6.014
8	14	M6	3.0	-	1	4900 8.014
10	14	M8x1	4.0	-	1	4900 10.014
12/14	14	M10x1	5.0	-	1	4900 12.014
16/18	14	M12x1	6.0	-	1	4900 16.014
20/25/32	14	M16x1	6.0	-	1	4900 20.014
20/25/32	14	M16x1	8.0	6.0	2	4900 20.114

MQL length pre-setting screws for the conversion

Product information

- for hydraulic chucks and shrink fit chucks
- optimised for MQL with special geometry
- with tapered stop for MQL conical shank ends

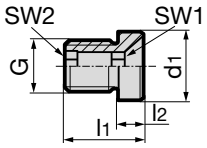

Article no. 4919

d_1 mm	l_1 mm	l_2 mm	G	SW1	SW2	Order no.
6	14.8	2.3	M5	2.5	2.5	4919 6.000
8	15.6	3.0	M6	3.0	3.0	4919 8.000
10	16.1	3.5	M8x1	4.0	4.0	4919 10.000
10	16.6	4.1	M8x1	3.0	3.0	4919 10.040
10	16.6	4.1	M6	3.0	3.0	4919 10.032
12	16.6	4.1	M10x1	5.0	5.0	4919 12.000
12	17.6	5.1	M6	3.0	3.0	4919 12.032
14	17.6	5.1	M10x1	5.0	5.0	4919 14.000
14	18.6	6.1	M6	3.0	3.0	4919 14.040
16	18.6	6.1	M12x1	5.0	5.0	4919 16.000
16	19.6	7.1	M6	3.0	3.0	4919 16.040
18	19.6	7.1	M12x1	5.0	5.0	4919 18.000
20	20.6	8.1	M16x1	5.0	5.0	4919 20.000
25	22.6	10.1	M16x1	8.0	6.0	4919 25.000
32	26.1	13.6	M16x1	8.0	6.0	4919 32.000

MQL coolant supply units HSK-A for the conversion

Product information

- replace conventional coolant supply sets, art. no. 4949, when applying MQL
- for hydraulic chucks to DIN 69882-7
- Attention: not suitable for application on machines with supply collar to DIN 69090-2

Scope of delivery

- complete MQL coolant supply set consisting of :
  coolant pipe, cap nut
  MQL tube and O-rings

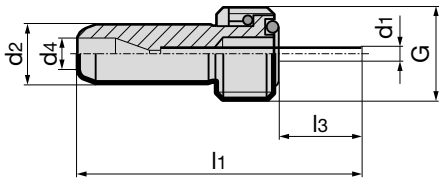

							Article no.	4924
for HSK-A	clamping-Ø mm	d_1 mm	d_2 mm	d_4 mm	l_1 mm	l_3 mm	G	Order no.
32	6	2.5	6	3.5	54.2	28.0	M10x1	**4924 32.010**
32	8	3.0	6	3.5	54.3	28.1	M10x1	**4924 32.030**
32	10	3.0	6	3.5	55.8	29.6	M10x1	**4924 32.050**
32	12	3.0	6	3.5	56.6	30.4	M10x1	**4924 32.070**
40	6	2.5	8	4.0	45.1	16.0	M12x1	**4924 40.010**
40	8	3.0	8	4.0	56.2	15.8	M12x1	**4924 40.030**
40	10	3.0	8	4.0	46.3	17.1	M12x1	**4924 40.050**
40	12	3.0	8	4.0	46.7	17.5	M12x1	**4924 40.070**
50	6	2.5	10	4.0	44.6	11.9	M16x1	**4924 50.010**
50	8	3.0	10	4.0	46.1	13.4	M16x1	**4924 50.030**
50	10	4.0	10	4.0	45.7	13.0	M16x1	**4924 50.050**
50	12	5.0	10	4.0	46.1	13.4	M16x1	**4924 50.070**
50	14	5.0	10	4.0	51.5	18.8	M16x1	**4924 50.090**
50	16	5.0	10	4.0	52.8	20.1	M16x1	**4924 50.110**
50	18	5.0	10	4.0	53.2	20.5	M16x1	**4924 50.130**
50	20	5.0	10	4.0	51.5	18.8	M16x1	**4924 50.150**
63	6	2.5	12	4.0	45.7	9.5	M18x1	**4924 63.010**
63	6	2.5	12	4.0	126.9	90.6	M18x1	**4924 63.011**
63	6	2.5	12	4.0	176.9	140.6	M18x1	**4924 63.012**
63	8	3.0	12	4.0	46.0	9.8	M18x1	**4924 63.030**
63	8	3.0	12	4.0	126.1	89.9	M18x1	**4924 63.031**
63	8	3.0	12	4.0	176.2	139.9	M18x1	**4924 63.032**
63	10	4.0	12	4.0	51.7	15.5	M18x1	**4924 63.050**
63	10	4.0	12	4.0	122.2	86.0	M18x1	**4924 63.051**
63	10	4.0	12	4.0	172.2	135.9	M18x1	**4924 63.052**
63	12/14/20	5.0	12	4.0	52.1	15.9	M18x1	**4924 63.070**
63	16/18	5.0	12	4.0	53.8	17.6	M18x1	**4924 63.090**
63	12/14	5.0	12	4.0	117.6	81.4	M18x1	**4924 63.091**
63	12/14	5.0	12	4.0	167.6	131.3	M18x1	**4924 63.092**
63	16	5.0	12	4.0	114.3	78.0	M18x1	**4924 63.111**
63	25/32	6.0	12	4.0	77.0	40.8	M18x1	**4924 63.120**
63	18	5.0	12	4.0	114.6	78.3	M18x1	**4924 63.131**
63	16/18	5.0	12	4.0	164.6	128.3	M18x1	**4924 63.132**
63	20	5.0	12	4.0	112.9	76.6	M18x1	**4924 63.151**
63	20	5.0	12	4.0	162.9	126.6	M18x1	**4924 63.152**
80	6	2.5	14	4.0	44.8	5.5	M20x1.5	**4924 80.010**
80	8	3.0	14	4.0	44.9	5.6	M20x1.5	**4924 80.030**
80	10	4.0	14	4.0	50.9	11.6	M20x1.5	**4924 80.050**
80	12	5.0	14	4.0	51.3	12.0	M20x1.5	**4924 80.070**
80	14	5.0	14	4.0	51.6	12.3	M20x1.5	**4924 80.090**
80	16	5.0	14	4.0	57.9	18.6	M20x1.5	**4924 80.110**
80	18	5.0	14	4.0	58.3	19.0	M20x1.5	**4924 80.130**
80	20	5.0	14	4.0	56.6	17.3	M20x1.5	**4924 80.150**
80	25	6.0	14	4.0	53.1	13.8	M20x1.5	**4924 80.170**
80	32	6.0	14	4.0	77.2	37.9	M20x1.5	**4924 80.190**
100	6	2.5	16	4.0	53.0	9.2	M24x1.5	**4924 100.010**
100	8	3.0	16	4.0	53.7	9.9	M24x1.5	**4924 100.030**
100	10	4.0	16	4.0	63.3	19.5	M24x1.5	**4924 100.050**
100	12	5.0	16	4.0	63.8	20.0	M24x1.5	**4924 100.070**
100	14	5.0	16	4.0	64.2	20.4	M24x1.5	**4924 100.090**
100	16	5.0	16	4.0	65.4	21.6	M24x1.5	**4924 100.110**
100	18	5.0	16	4.0	65.8	22.0	M24x1.5	**4924 100.130**
100	20	5.0	16	4.0	69.2	25.4	M24x1.5	**4924 100.150**
100	25	6.0	16	4.0	68.6	24.8	M24x1.5	**4924 100.170**
100	32	6.0	16	4.0	64.6	20.8	M24x1.5	**4924 100.190**

TSG 3000

SHRINK FIT TECHNOLOGY

TSG 3000

THE SAFEST SHRINK FIT CHUCK!

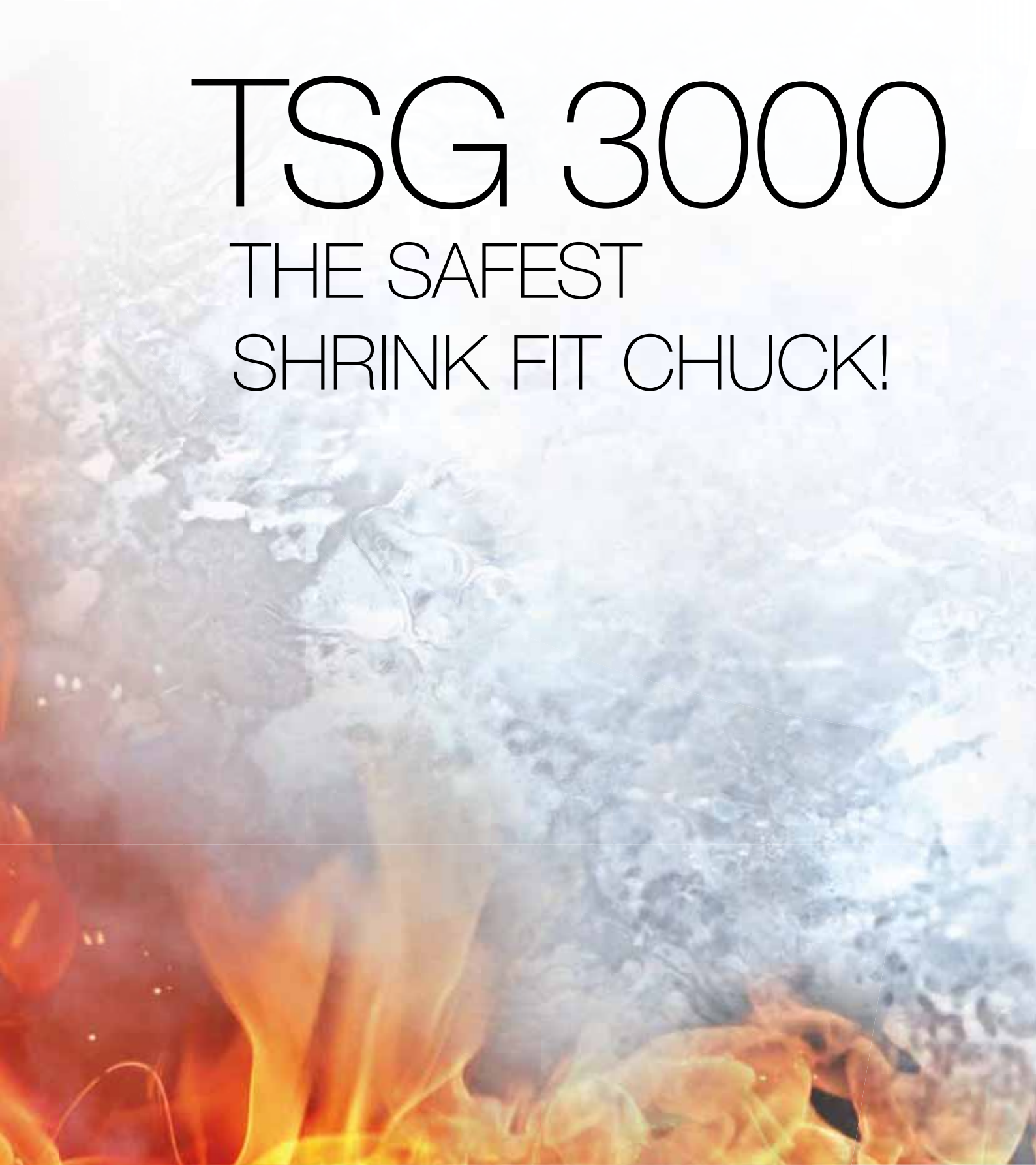

HIGHEST OPERATIONAL SAFETY THANKS TO TEMPERATURE INDICATOR

PVD-COATING FOR LONG TOOL LIFE

LENGTH SETTING SCREW WITH AXIAL DAMPING

Product information

- coating for protection against oxidation, cleanliness and longevity
- safety colour ring for maximum operator safety
- with axial damping screw for optimal concentricity
- max. deviation f. concentricity 3 µm
- for tool shank tolerance h6
- to DIN 69882-8
- balancing quality: G2.5 / 25,000 rev./min or U< 1 gmm
- designed with 6xM6 balancing screws for the highest accuracy
- HSK-A to ISO 12164-1/DIN 69893-1

Scope of delivery

- incl. length setting screw with axial force damping article no. 4941 for conventional cooling
- for conventional cooling order coolant supply set, article no. 4949, separately
- for MQL application order as special tool holder
- special dimensions and extra lengths on request

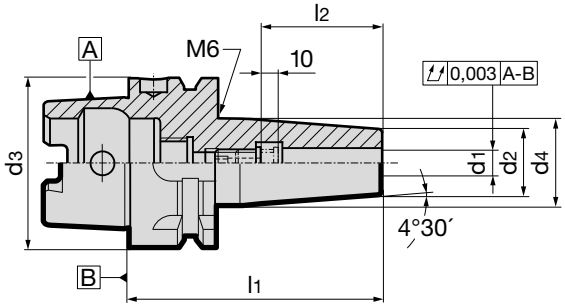

HSK-A d_3	for shank Ø $d_{1\ h6}$ mm	d_2 mm	d_4 mm	l_1 mm	l_2 mm	incl. setting screw art. no. 4941 …	kg	Article no. 4726 Order no.
63	6	21	27	80	36	6.100	1.00	**4726 6.063**
63	8	21	27	80	36	8.100	1.00	**4726 8.063**
63	10	24	32	85	41	10.100	1.00	**4726 10.063**
63	12	24	32	90	46	12.100	1.00	**4726 12.063**
63	14	27	34	90	46	14.100	1.00	**4726 14.063**
63	16	27	34	95	49	16.100	1.00	**4726 16.063**
63	18	33	42	95	49	18.100	1.00	**4726 18.063**
63	20	33	42	100	51	20.100	1.00	**4726 20.063**
63	25	44	53	115	57	25.100	2.00	**4726 25.063**
63	32	44	53	120	61	32.100	2.00	**4726 32.063**
100	6	21	27	85	36	6.100	2.00	**4726 6.100**
100	8	21	27	85	36	8.100	2.00	**4726 8.100**
100	10	24	32	90	41	10.100	2.00	**4726 10.100**
100	12	24	32	95	46	12.100	2.00	**4726 12.100**
100	14	27	34	95	46	14.100	2.00	**4726 14.100**
100	16	27	34	100	49	16.100	2.00	**4726 16.100**
100	18	33	42	100	49	18.100	2.50	**4726 18.100**
100	20	33	42	105	51	20.100	2.50	**4726 20.100**
100	25	44	53	115	57	25.100	3.00	**4726 25.100**
100	32	44	53	120	61	32.100	3.00	**4726 32.100**

Product information

- balancing quality: G2.5 / 25,000 rev./min or U< 1 gmm
- incl. balancing thread 4xM6/6xM6
- to DIN 69882-8
- for tool shank tolerance h6
- also available in the lengths
  l1 = 120 mm (concentricity 4 µm),
  160 mm (concentricity 5 µm)
  and 200 mm (concentricity 7 µm)
- HSK-A to ISO12164-1 / DIN 69893-1

Scope of delivery

- incl. setting screw, article no. 4977 or 4904
- for conventional cooling order coolant supply set, article no. 4949, separately
- special dimensions on request

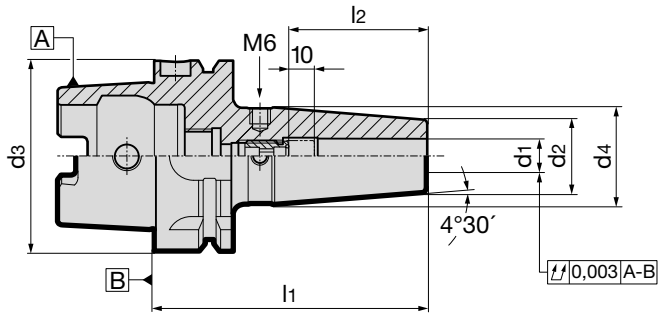

HSK-A d_3	for shank Ø d_1 h6 mm	d_2 mm	d_4 mm	l_1 mm	l_2 mm	incl. setting screw art. no.	order no.	kg	Article no. 4736 Order no.
32	6	21	26	70	36	4977	6.014	0.30	**4736 6.032**
32	8	21	26	70	36	4977	8.014	0.30	**4736 8.032**
32	10	24	30	75	41	4977	10.014	0.30	**4736 10.032**
32	12	24	30	80	46	4977	12.014	0.30	**4736 12.032**
40	6	21	27	80	36	4977	6.014	0.40	**4736 6.040**
40	8	21	27	80	36	4977	8.014	0.40	**4736 8.040**
40	10	24	32	80	41	4977	10.014	0.50	**4736 10.040**
40	12	24	32	90	46	4977	12.014	0.50	**4736 12.040**
40	14	27	34	90	46	4977	12.014	0.60	**4736 14.040**
40	16	27	34	90	49	4977	16.014	0.50	**4736 16.040**
40	18	33	42	95	49	4977	16.014	0.90	**4736 18.040**
40	20	33	42	100	51	4977	20.114	0.90	**4736 20.040**
50	6	21	27	80	36	4977	6.014	0.60	**4736 6.050**
50	8	21	27	80	36	4977	8.014	0.60	**4736 8.050**
50	10	24	32	85	41	4977	10.014	0.70	**4736 10.050**
50	12	24	32	90	46	4977	12.014	0.70	**4736 12.050**
50	14	27	34	90	46	4977	12.014	0.70	**4736 14.050**
50	16	27	34	95	49	4977	16.014	1.00	**4736 16.050**
50	18	33	42	95	49	4977	16.014	0.90	**4736 18.050**
50	20	33	42	100	51	4977	20.114	0.90	**4736 20.050**
63	3	10	18	80	30	4904	5.016	0.70	**4736 3.063**
63	4	10	18	80	35	4904	6.016	0.70	**4736 4.063**
63	5	10	18	80	40	4904	8.018	0.70	**4736 5.063**
63	6	21	27	80	36	4977	6.014	0.80	**4736 6.063**
63	8	21	27	80	36	4977	8.014	0.80	**4736 8.063**
63	10	24	32	85	41	4977	10.014	0.90	**4736 10.063**
63	12	24	32	90	46	4977	12.014	0.90	**4736 12.063**
63	14	27	34	90	46	4977	12.014	1.00	**4736 14.063**
63	16	27	34	95	49	4977	16.014	1.00	**4736 16.063**
63	18	33	42	95	49	4977	16.014	1.20	**4736 18.063**
63	20	33	42	100	51	4977	20.114	1.20	**4736 20.063**
63	25	44	53	115	57	4977	20.114	1.80	**4736 25.063**
63	32	44	53	120	61	4977	20.114	1.70	**4736 32.063**
63	3	10	25	120	30	4904	5.016	0.80	**4736 203.063**
63	4	10	25	120	35	4904	6.016	0.80	**4736 204.063**
63	5	10	25	120	40	4904	8.018	0.80	**4736 205.063**
63	6	21	27	120	36	4977	6.014	0.90	**4736 206.063**
63	8	21	27	120	36	4977	8.014	1.00	**4736 208.063**
63	10	24	32	120	41	4977	10.014	1.10	**4736 210.063**
63	12	24	32	120	46	4977	12.014	1.20	**4736 212.063**
63	14	27	34	120	46	4977	12.014	1.20	**4736 214.063**
63	16	27	34	120	49	4977	16.014	1.20	**4736 216.063**
63	18	33	42	120	49	4977	16.014	1.40	**4736 218.063**
63	20	33	42	120	51	4977	20.114	1.40	**4736 220.063**

HSK-A d_3	for shank Ø d_1 h6 mm	d_2 mm	d_4 mm	l_1 mm	l_2 mm	incl. setting screw art. no.	order no.	kg	Article no. 4736 Order no.
63	3	10	31	160	30	4904	5.016	0.90	**4736 103.063**
63	4	10	31	160	35	4904	6.016	0.90	**4736 104.063**
63	5	10	31	160	40	4904	8.018	0.90	**4736 105.063**
63	6	21	27	160	36	4977	6.014	1.10	**4736 106.063**
63	8	21	27	160	36	4977	8.014	1.10	**4736 108.063**
63	10	24	32	160	41	4977	10.014	1.30	**4736 110.063**
63	12	24	32	160	46	4977	12.014	1.30	**4736 112.063**
63	14	27	34	160	46	4977	12.014	1.40	**4736 114.063**
63	16	27	34	160	49	4977	16.014	1.40	**4736 116.063**
63	18	33	42	160	49	4977	16.014	1.60	**4736 118.063**
63	20	33	42	160	51	4977	20.114	1.60	**4736 120.063**
63	25	44	53	160	57	4977	20.114	1.80	**4736 125.063**
63	32	44	53	160	61	4977	20.114	1.70	**4736 132.063**
63	6	21	27	200	36	4977	6.014	1.30	**4736 306.063**
63	8	21	27	200	36	4977	8.014	1.30	**4736 308.063**
63	10	24	32	200	41	4977	10.014	1.50	**4736 310.063**
63	12	24	32	200	46	4977	12.014	1.50	**4736 312.063**
63	14	27	34	200	46	4977	12.014	1.70	**4736 314.063**
63	16	27	34	200	49	4977	16.014	1.70	**4736 316.063**
63	18	33	42	200	49	4977	16.014	1.80	**4736 318.063**
63	20	33	42	200	51	4977	20.114	1.80	**4736 320.063**
63	25	44	53	200	57	4977	20.114	2.00	**4736 325.063**
63	32	44	53	200	61	4977	20.114	1.90	**4736 332.063**
80	6	21	27	85	36	4977	6.014	1.30	**4736 6.080**
80	8	21	27	85	36	4977	8.014	1.30	**4736 8.080**
80	10	24	32	90	41	4977	10.014	1.40	**4736 10.080**
80	12	24	32	95	46	4977	12.014	1.40	**4736 12.080**
80	14	27	34	95	46	4977	12.014	1.50	**4736 14.080**
80	16	27	34	100	49	4977	16.014	1.50	**4736 16.080**
80	18	33	42	100	49	4977	16.014	1.70	**4736 18.080**
80	20	33	42	105	51	4977	20.114	1.70	**4736 20.080**
80	25	44	53	115	57	4977	20.114	2.20	**4736 25.080**
80	32	44	53	120	61	4977	20.114	2.10	**4736 32.080**
80	6	21	27	160	36	4977	6.014	1.60	**4736 106.080**
80	8	21	27	160	36	4977	8.014	1.60	**4736 108.080**
80	10	24	32	160	41	4977	10.014	1.80	**4736 110.080**
80	12	24	32	160	46	4977	12.014	1.80	**4736 112.080**
80	14	27	34	160	46	4977	12.014	1.90	**4736 114.080**
80	16	27	34	160	49	4977	16.014	1.90	**4736 116.080**
80	18	33	42	160	49	4977	16.014	2.30	**4736 118.080**
80	20	33	42	160	51	4977	20.114	2.30	**4736 120.080**
80	25	44	53	160	57	4977	20.114	3.00	**4736 125.080**
80	32	44	53	160	61	4977	20.114	2.80	**4736 132.080**
100	6	21	27	85	36	4977	6.014	2.20	**4736 6.100**
100	8	21	27	85	36	4977	8.014	2.20	**4736 8.100**
100	10	24	32	90	41	4977	10.014	2.30	**4736 10.100**
100	12	24	32	95	46	4977	12.014	2.30	**4736 12.100**
100	14	27	34	95	46	4977	12.014	2.30	**4736 14.100**
100	16	27	34	100	49	4977	16.014	2.30	**4736 16.100**
100	18	33	42	100	49	4977	16.014	2.50	**4736 18.100**
100	20	33	42	105	51	4977	20.114	2.50	**4736 20.100**
100	25	44	53	115	57	4977	20.114	3.00	**4736 25.100**
100	32	44	53	120	61	4977	20.114	3.00	**4736 32.100**
100	6	21	27	160	36	4977	6.014	2.60	**4736 106.100**
100	8	21	27	160	36	4977	8.014	2.50	**4736 108.100**
100	10	24	32	160	41	4977	10.014	2.70	**4736 110.100**
100	12	24	32	160	46	4977	12.014	2.70	**4736 112.100**
100	14	27	34	160	46	4977	12.014	2.80	**4736 114.100**
100	16	27	34	160	49	4977	16.014	2.80	**4736 116.100**
100	18	33	42	160	49	4977	16.014	3.20	**4736 118.100**
100	20	33	42	160	51	4977	20.114	3.10	**4736 120.100**
100	25	44	53	160	57	4977	20.114	3.90	**4736 125.100**
100	32	44	53	160	61	4977	20.114	3.70	**4736 132.100**
100	6	21	27	200	36	4977	6.014	2.80	**4736 306.100**
100	8	21	27	200	36	4977	8.014	2.80	**4736 308.100**

									Article no.	4736
HSK-A d_3	for shank Ø $d_{1\ h6}$ mm	d_2 mm	d_4 mm	l_1 mm	l_2 mm	incl. setting screw art. no.	order no.	kg		Order no.
100	10	24	32	200	41	4977	10.014	2.90		**4736 310.100**
100	12	24	32	200	46	4977	12.014	2.90		**4736 312.100**
100	14	27	34	200	46	4977	12.014	3.00		**4736 314.100**
100	16	27	34	200	49	4977	16.014	3.00		**4736 316.100**
100	18	33	42	200	49	4977	16.014	3.40		**4736 318.100**
100	20	33	42	200	51	4977	20.114	3.30		**4736 320.100**
100	25	44	53	200	57	4977	20.114	4.00		**4736 325.100**
100	32	44	53	200	61	4977	20.114	3.90		**4736 332.100**

GÜHRING

The perfect combination from one reliable supplier: High performance milling cutters and GÜHROJET shrink fit chucks made by Gühring

Product information

- balancing quality: G2.5 / 25,000 rev./min or U< 1 gmm
- incl. balancing thread 4xM6/6xM6
- for tool shank tolerance h6
- to DIN 69882-8
- optimised cooling for tools without internal coolant ducts
- good chip evacuation and increased process reliability
- Coolant ducts:
  d_1 = 6 - 10 mm with two coolant ducts
  d_1 = 12 - 32 mm with four coolant ducts
- HSK-A to ISO 12164-1/DIN 69893-1

Scope of delivery

- incl. setting screw, article no. 4938
- for conventional cooling order coolant supply set, article no. 4949, separately
- special dimensions on request

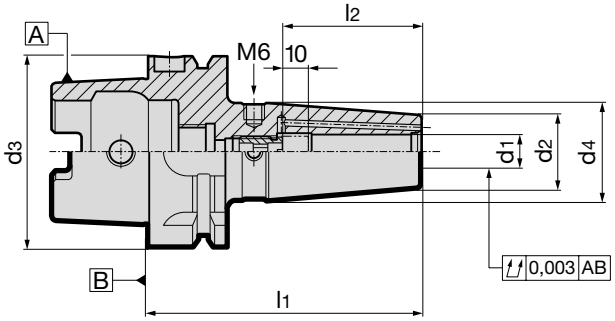

GÜHROJET

HSK-A d_3	for shank Ø $d_{1\ h6}$ mm	d_2 mm	d_4 mm	l_1 mm	l_2 mm	incl. setting screw art. no. 4938 …	kg	Article no. 4755 Order no.
40	6	21	27	80	36	6.000	0.50	4755 6.040
40	8	21	27	80	36	8.000	0.50	4755 8.040
40	10	24	32	80	41	10.000	0.50	4755 10.040
40	12	24	32	90	46	12.000	0.50	4755 12.040
40	14	27	33.5	90	46	12.000	0.50	4755 14.040
40	16	27	33.5	90	49	16.000	0.50	4755 16.040
50	6	21	27	80	36	6.000	0.60	4755 6.050
50	8	21	27	80	36	8.000	0.60	4755 8.050
50	10	24	32	85	41	10.000	0.60	4755 10.050
50	12	24	32	90	46	12.000	0.70	4755 12.050
50	14	27	34	90	46	12.000	0.70	4755 14.050
50	16	27	34	95	49	16.000	0.70	4755 16.050
50	18	33	41.5	95	49	16.000	0.90	4755 18.050
50	20	33	41.5	100	51	20.000	0.90	4755 20.050
63	6	21	27	80	36	6.000	0.80	4755 6.063
63	8	21	27	80	36	8.000	0.80	4755 8.063
63	10	24	32	85	41	10.000	0.90	4755 10.063
63	12	24	32	90	46	12.000	0.90	4755 12.063
63	14	27	34	90	46	12.000	1.00	4755 14.063
63	16	27	34	95	49	16.000	1.00	4755 16.063
63	18	33	42	95	49	16.000	1.20	4755 18.063
63	20	33	42	100	51	20.000	1.20	4755 20.063
63	6	21	27	120	36	6.000	0.90	4755 206.063
63	8	21	27	120	36	8.000	0.90	4755 208.063
63	10	24	32	120	41	10.000	1.10	4755 210.063
63	12	24	32	120	46	12.000	1.20	4755 212.063
63	14	27	34	120	46	12.000	1.20	4755 214.063
63	16	27	34	120	49	16.000	1.20	4755 216.063
63	18	33	42	120	49	16.000	1.20	4755 218.063
63	20	33	42	120	51	20.000	1.40	4755 220.063
100	6	21	27	85	36	6.000	2.20	4755 6.100
100	8	21	27	85	36	8.000	2.20	4755 8.100
100	10	24	32	90	41	10.000	2.30	4755 10.100
100	12	24	32	95	46	12.000	2.30	4755 12.100
100	14	27	34	95	46	12.000	2.30	4755 14.100
100	16	27	34	100	49	16.000	2.30	4755 16.100
100	18	33	42	100	49	16.000	2.50	4755 18.100
100	20	33	42	105	51	20.000	2.50	4755 20.100
100	25	44	53	115	57	20.000	3.00	4755 25.100
100	32	44	53	120	61	20.000	3.00	4755 32.100

Product information

- balancing quality: G2.5 / 25,000 rev./min or U< 1 gmm
- incl. balancing thread 4xM6/6xM6
- for tool shank tolerance h6
- to DIN 69882-8
- HSK-C to ISO 12164-1/DIN 69893-1

Scope of delivery

- incl. setting screw, article no. 4977
- special dimensions on request

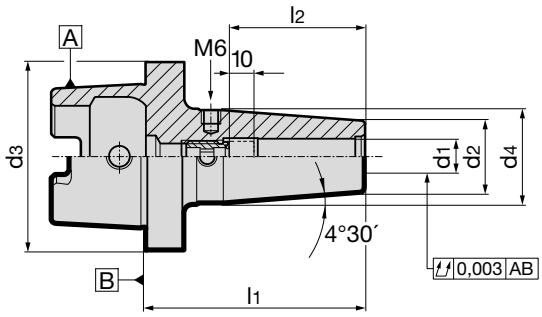

HSK-C d_3	for clamping-Ø $d_{1\ h6}$ mm	d_2 mm	d_4 mm	l_1 mm	l_2 mm	incl. setting screw art. no. 4977 …	kg	Article no. 4758 Order no.
32	6	21	26.0	65	36	6.014	0.30	**4758 6.032**
32	8	21	26.0	65	36	8.014	0.30	**4758 8.032**
32	10	24	30.0	65	41	10.014	0.30	**4758 10.032**
32	12	24	32.0	75	46	12.014	0.40	**4758 12.032**
40	6	21	30.0	70	36	6.014	0.50	**4758 6.040**
40	8	21	30.0	70	36	8.014	0.30	**4758 8.040**
40	10	24	33.5	70	41	10.014	0.40	**4758 10.040**
40	12	24	35.0	80	46	12.014	0.40	**4758 12.040**
40	14	27	38.0	80	46	12.014	0.50	**4758 14.040**
40	16	27	38.0	80	49	16.014	0.50	**4758 16.040**
50	6	21	30.0	70	36	6.014	0.50	**4758 6.050**
50	8	21	30.0	70	36	8.014	0.40	**4758 8.050**
50	10	24	33.0	75	41	10.014	0.50	**4758 10.050**
50	12	24	34.0	80	46	12.014	0.50	**4758 12.050**
50	14	27	37.0	80	46	12.014	0.60	**4758 14.050**
50	16	27	38.5	85	49	16.014	0.60	**4758 16.050**
50	18	33	44.5	85	49	16.014	0.80	**4758 18.050**
50	20	33	45.0	90	51	20.114	0.80	**4758 20.050**
63	6	21	30.0	70	36	6.014	0.60	**4758 6.063**
63	8	21	30.0	70	36	8.014	0.60	**4758 8.063**
63	10	24	34.0	75	41	10.014	0.70	**4758 10.063**
63	12	24	34.0	80	46	12.014	0.70	**4758 12.063**
63	14	27	36.0	80	46	12.014	0.80	**4758 14.063**
63	16	27	36.0	85	49	16.014	0.80	**4758 16.063**
63	18	33	44.0	85	49	16.014	1.00	**4758 18.063**
63	20	33	45.0	90	51	20.114	1.00	**4758 20.063**
63	25	44	53.0	100	57	20.114	1.50	**4758 25.063**
63	32	44	53.0	110	61	20.114	1.50	**4758 32.063**

Product information

- balancing quality G2.5 / 25,000 rev./min or U < 1 gmm
- for tool shank tolerance h6
- HSK-E to ISO 12164-1 / DIN 69893-5 with access hole

Scope of delivery

- incl. setting screw, article no. 4977 or 4904
- for conventional cooling order coolant supply set, article no. 4949, separately
- special dimensions on request

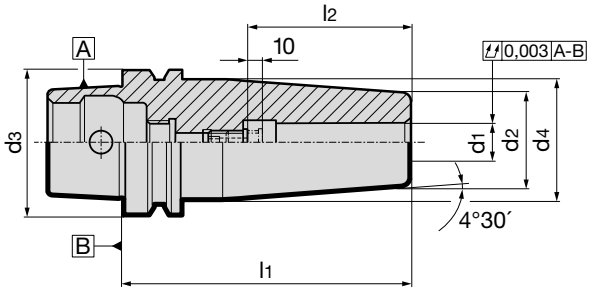

HSK-E d_3	for shank Ø d_1 h6 mm	d_2 mm	d_4 mm	l_1 mm	l_2 mm	incl. setting screw art. no.	order no.	kg	Article no. 4737 Order no.
32	3	10	16	60	–	–		0.16	**4737 3.032**
32	4	10	16	60	–	–		0.16	**4737 4.032**
32	5	10	16	60	–	–		0.16	**4737 5.032**
32	6	21	26	70	36	4977	6.014	0.18	**4737 6.032**
32	8	21	26	70	36	4977	8.014	0.20	**4737 8.032**
32	10	24	29	75	41	4977	10.014	0.25	**4737 10.032**
32	12	24	29	80	46	4977	12.014	0.25	**4737 12.032**
40	3	10	19	80	–	–		0.28	**4737 3.040**
40	4	10	19	80	–	–		0.28	**4737 4.040**
40	5	10	19	80	–	–		0.27	**4737 5.040**
40	6	21	27	80	36	4977	6.014	0.41	**4737 6.040**
40	8	21	27	80	36	4977	8.014	0.41	**4737 8.040**
40	10	24	32	80	41	4977	10.014	0.48	**4737 10.040**
40	12	24	32	90	46	4977	12.014	0.52	**4737 12.040**
40	14	27	34	90	46	4977	12.014	0.57	**4737 14.040**
40	16	27	34	90	49	4977	16.014	0.55	**4737 16.040**
50	3	10	18	80	30	4904	5.016	0.49	**4737 3.050**
50	4	10	18	80	35	4904	6.016	0.49	**4737 4.050**
50	5	10	18	80	–	–		0.49	**4737 5.050**
50	6	21	27	80	36	4977	6.014	0.59	**4737 6.050**
50	8	21	27	80	36	4977	8.014	0.58	**4737 8.050**
50	10	24	32	85	41	4977	10.014	0.57	**4737 10.050**
50	12	24	32	90	46	4977	12.014	0.69	**4737 12.050**
50	14	27	34	90	46	4977	12.014	0.74	**4737 14.050**
50	16	27	34	95	49	4977	16.014	0.75	**4737 16.050**
50	18	33	42	95	49	4977	16.014	0.92	**4737 18.050**
50	20	33	42	100	51	4977	20.114	0.94	**4737 20.050**
63	6	21	27	80	36	4977	6.014	0.86	**4737 6.063**
63	8	21	27	80	36	4977	8.014	0.85	**4737 8.063**
63	10	24	32	85	41	4977	10.014	0.94	**4737 10.063**
63	12	24	32	90	46	4977	12.014	0.96	**4737 12.063**
63	14	27	34	90	46	4977	12.014	1.01	**4737 14.063**
63	16	27	34	95	49	4977	16.014	1.02	**4737 16.063**
63	18	33	42	95	49	4977	16.014	1.19	**4737 18.063**
63	20	33	42	100	51	4977	20.114	1.21	**4737 20.063**
63	25	44	53	115	57	4977	20.114	1.80	**4737 25.063**
63	32	44	53	120	61	4977	20.114	1.73	**4737 32.063**

Product information

- coating for protection against oxidation, cleanliness and longevity
- safety colour ring for maximum operator safety
- with axial damping screw for optimal concentricity
- max. deviation for concentricity 3 µm
- for tool shank tolerance h6
- ISO taper to DIN ISO 7388-1 form AD/AF
- balancing quality: G2.5 / 25,000 rev./min or U< 1 gmm
- designed with 6xM6 balancing screws for the highest accuracy

Scope of delivery

- incl. length setting screw with axial force damping, article no. 4941, for conventional cooling
- order pull studs, article no. 4925 or 4926, separately
- special dimensions on request
- for MQL application order as special tool holder

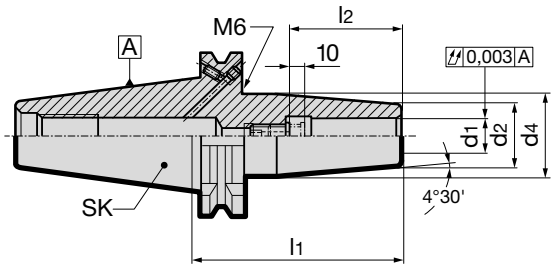

							Article no.	4727
ISO taper	for shank Ø $d_{1\ h6}$ mm	d_2 mm	d_4 mm	l_1 mm	l_2 mm	incl. setting screw art. no. 4941 …	kg	Order no.
40	6	21	27	80	36	6.041	1.00	**4727 6.040**
40	8	21	27	80	36	8.040	1.00	**4727 8.040**
40	10	24	32	80	41	10.050	1.00	**4727 10.040**
40	12	24	32	80	46	12.100	1.00	**4727 12.040**
40	14	27	34	80	46	14.100	1.00	**4727 14.040**
40	16	27	34	80	49	16.100	1.00	**4727 16.040**
40	18	33	42	80	49	18.100	1.00	**4727 18.040**
40	20	33	42	80	51	20.100	1.50	**4727 20.040**
40	25	44	53	100	57	25.100	1.50	**4727 25.040**
40	32	44	53	100	61	32.100	1.50	**4727 32.040**

Product information

- balancing quality G2.5 / 25,000 rev./min or U < 1 gmm
- incl. balancing thread 4xM6/6xM6
- ISO taper to DIN ISO 7388-1 form AD/AF
- for tool shank tolerance h6
- also available in the lengths l1 = 120 mm (concentricity 4 µm), 160 mm (concentricity 5 µm) and 200 mm (concentricity 7 µm)

Scope of delivery

- incl. setting screw, article no. 4977 or 4904
- order pull studs, article no. 4925 or 4926, separately
- special dimensions on request

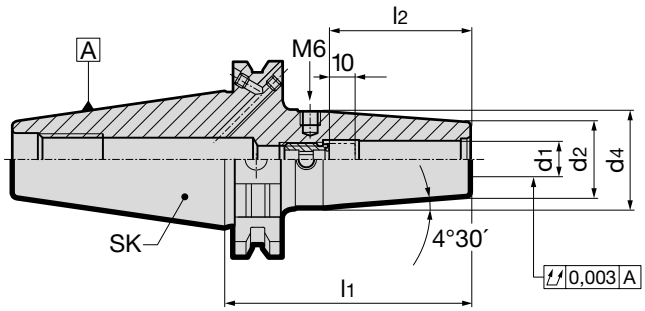

									Article no.	4738
ISO taper	for shank Ø d_1 h6 mm	d_2 mm	d_4 mm	l_1 mm	l_2 mm	incl. setting screw art. no.	order no.	kg		Order no.
40	3	10	18	80	30	4904	5.016	0.90		4738 3.040
40	4	10	18	80	35	4904	6.016	0.90		4738 4.040
40	5	10	18	80	40	4904	8.018	0.90		4738 5.040
40	6	21	27	80	36	4977	6.014	1.00		4738 6.040
40	8	21	27	80	36	4977	8.014	1.00		4738 8.040
40	10	24	32	80	41	4977	10.014	1.10		4738 10.040
40	12	24	32	80	46	4977	12.014	1.00		4738 12.040
40	14	27	34	80	46	4977	12.014	1.10		4738 14.040
40	16	27	34	80	49	4977	16.014	1.10		4738 16.040
40	18	33	42	80	49	4977	16.014	1.20		4738 18.040
40	20	33	42	80	51	4977	20.114	1.50		4738 20.040
40	25	44	53	100	57	4977	20.114	1.50		4738 25.040
40	32	44	53	100	61	4977	20.114	1.50		4738 32.040
40	3	10	24	120	30	4904	5.016	1.00		4738 203.040
40	4	10	24	120	35	4904	6.016	1.00		4738 204.040
40	5	10	24	120	40	4904	8.018	1.00		4738 205.040
40	6	21	27	120	36	4977	6.014	1.10		4738 206.040
40	8	21	27	120	36	4977	8.014	1.10		4738 208.040
40	10	24	32	120	41	4977	10.014	1.20		4738 210.040
40	12	24	32	120	46	4977	12.014	1.20		4738 212.040
40	14	27	34	120	46	4977	12.014	1.40		4738 214.040
40	16	27	34	120	49	4977	16.014	1.40		4738 216.040
40	18	33	42	120	49	4977	16.014	1.50		4738 218.040
40	20	33	42	120	51	4977	20.114	1.50		4738 220.040
40	3	10	31	160	30	4904	5.016	1.10		4738 103.040
40	4	10	31	160	35	4904	6.016	1.10		4738 104.040
40	5	10	31	160	40	4904	8.018	1.10		4738 105.040
40	6	21	27	160	36	4977	6.014	1.30		4738 106.040
40	8	21	27	160	36	4977	8.014	1.30		4738 108.040
40	10	24	32	160	41	4977	10.014	1.50		4738 110.040
40	12	24	32	160	46	4977	12.014	1.50		4738 112.040
40	14	27	34	160	46	4977	12.014	1.70		4738 114.040
40	16	27	34	160	49	4977	16.014	1.70		4738 116.040
40	18	33	42	160	49	4977	16.014	1.90		4738 118.040
40	20	33	42	160	51	4977	20.114	1.90		4738 120.040
40	25	44	53	160	57	4977	20.114	2.20		4738 125.040
40	6	21	27	200	36	4977	6.014	1.60		4738 306.040
40	8	21	27	200	36	4977	8.014	1.60		4738 308.040
40	10	24	32	200	41	4977	10.014	1.80		4738 310.040
40	12	24	32	200	46	4977	12.014	1.80		4738 312.040
40	14	27	34	200	46	4977	12.014	2.10		4738 314.040
40	16	27	34	200	49	4977	16.014	2.10		4738 316.040

ISO taper	for shank Ø $d_{1\ h6}$ mm	d_2 mm	d_4 mm	l_1 mm	l_2 mm	incl. setting screw art. no.	order no.	kg	Article no. 4738 Order no.
40	18	33	42	200	49	4977	16.014	2.30	**4738 318.040**
40	20	33	42	200	51	4977	20.114	2.30	**4738 320.040**
40	25	44	53	200	58	4977	20.114	2.60	**4738 325.040**
40	32	44	53	200	61	4977	20.114	2.50	**4738 332.040**
50	3	10	18	80	30	4904	5.016	2.60	**4738 3.050**
50	4	10	18	80	35	4904	6.016	2.60	**4738 4.050**
50	5	10	18	80	40	4904	8.018	2.60	**4738 5 .050**
50	6	21	27	80	36	4977	6.014	2.90	**4738 6.050**
50	8	21	27	80	36	4977	8.014	2.90	**4738 8.050**
50	10	24	32	80	41	4977	10.014	2.90	**4738 10.050**
50	12	24	32	80	46	4977	12.014	2.90	**4738 12.050**
50	14	27	34	80	46	4977	12.014	3.00	**4738 14.050**
50	16	27	34	80	49	4977	16.014	3.00	**4738 16.050**
50	18	33	42	80	49	4977	16.014	3.00	**4738 18.050**
50	20	33	42	80	51	4977	20.114	3.00	**4738 20.050**
50	25	44	53	100	57	4977	20.114	3.60	**4738 25.050**
50	32	44	53	100	61	4977	20.114	3.50	**4738 32.050**
50	6	21	27	160	36	4977	6.014	3.10	**4738 106.050**
50	8	21	27	160	36	4977	8.014	3.10	**4738 108.050**
50	10	24	32	160	41	4977	10.014	3.40	**4738 110.050**
50	12	24	32	160	46	4977	12.014	3.40	**4738 112.050**
50	14	27	34	160	46	4977	12.014	3.70	**4738 114.050**
50	16	27	34	160	49	4977	16.014	3.70	**4738 116.050**
50	18	33	42	160	49	4977	16.014	4.10	**4738 118.050**
50	20	33	42	160	51	4977	20.114	4.10	**4738 120.050**
50	25	44	53	160	57	4977	20.114	4.70	**4738 125.050**
50	32	44	53	160	61	4977	20.114	4.60	**4738 132.050**
50	6	21	27	200	36	4977	6.014	3.40	**4738 306.050**
50	8	21	27	200	36	4977	8.014	3.40	**4738 308.050**
50	10	24	32	200	41	4977	10.014	3.70	**4738 310.050**
50	12	24	32	200	46	4977	12.014	3.70	**4738 312.050**
50	14	27	34	200	46	4977	12.014	4.00	**4738 314.050**
50	16	27	34	200	49	4977	16.014	4.00	**4738 316.050**
50	18	33	42	200	49	4977	16.014	4.40	**4738 318.050**
50	20	33	42	200	51	4977	20.114	4.40	**4738 320.050**
50	25	44	53	200	57	4977	20.114	5.00	**4738 325.050**
50	32	44	53	200	61	4977	20.114	4.90	**4738 332.050**

Product information

- balancing quality G2.5 / 25,000 rev./min or U < 1 gmm
- incl. balancing thread 4xM6/6xM6
- ISO taper to DIN ISO 7388-1 form AD/AF
- for tool shank tolerance h6
- optimised cooling for tools without internal coolant ducts
- good chip evacuation and increased process reliability
- Coolant ducts:
  d_1 = 6 - 10 mm with two coolant ducts
  d_1 = 12 - 32 mm with four coolant ducts

Scope of delivery

- incl. setting screw, article no. 4977
- order pull studs, article no. 4925 or 4926, separately
- special dimensions on request

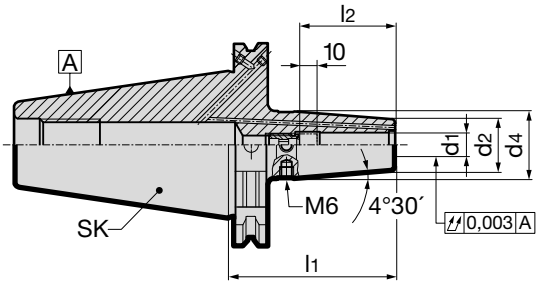

GÜHROJET

ISO taper	for shank Ø $d_{1\ h6}$ mm	d_2 mm	d_4 mm	l_1 mm	l_2 mm	incl. setting screw art. no.	order no.	kg	Article no. 4729 Order no.
40	6	21	27	80	36	4977	6.014	1.00	**4729 6.040**
40	8	21	27	80	36	4977	8.014	1.00	**4729 8.040**
40	10	24	32	80	41	4977	10.014	1.10	**4729 10.040**
40	12	24	32	80	46	4977	12.014	1.00	**4729 12.040**
40	14	27	34	80	46	4977	12.014	1.10	**4729 14.040**
40	16	27	34	80	49	4977	16.014	1.10	**4729 16.040**
40	18	33	42	80	49	4977	16.014	1.20	**4729 18.040**
40	20	33	42	80	51	4977	20.114	1.50	**4729 20.040**
50	6	21	27	80	36	4977	6.014	2.80	**4729 6.050**
50	8	21	27	80	36	4977	8.014	2.80	**4729 8.050**
50	10	24	32	80	41	4977	10.014	2.80	**4729 10.050**
50	12	24	32	80	46	4977	12.014	2.80	**4729 12.050**
50	14	27	34	80	46	4977	12.014	2.80	**4729 14.050**
50	16	27	34	80	49	4977	16.014	2.80	**4729 16.050**
50	18	33	42	80	49	4977	16.014	3.00	**4729 18.050**
50	20	33	42	80	51	4977	20.114	3.00	**4729 20.050**
50	25	44	53	100	57	4977	20.114	3.50	**4729 25.050**
50	32	44	53	100	61	4977	20.114	3.30	**4729 32.050**

Product information

- balancing quality: G2.5 / 25,000 rev./min or U< 1 gmm
- Design for 6xM6 balancing screws for maximum accuracy
- Coating for oxidation protection, cleanliness and longevity
- Safety colour ring for maximum operator safety
- with axial dampening screw for optimal concentricity
- max. 3 µm deviation from concentricity
- for tool shank tolerance h6
- MAS/BT to DIN ISO 7388-2 form JD/JF (AD/B)

Scope of delivery

- incl. length setting screw with axial force damping, article no. 4941, for conventional cooling
- order pull studs, article no. 4927 or 4928, separately
- special dimensions on request
- MAS/BT 50 on request
- for MQL application order as special tool holder

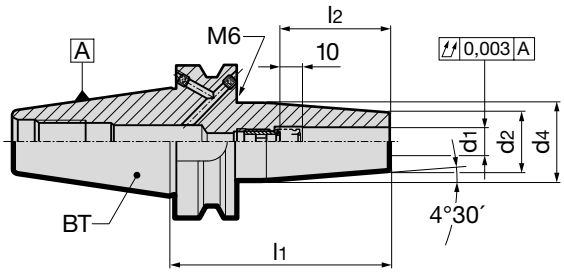

MAS/BT	for shank Ø $d_{1\ h6}$ mm	d_2 mm	d_4 mm	l_1 mm	l_2 mm	incl. setting screw art. no. 4941 …	kg	Article no. 4728 Order no.
40	6	21	27	90	36	6.041	1.00	**4728 6.040**
40	8	21	27	90	36	8.040	1.00	**4728 8.040**
40	10	24	32	90	41	10.050	1.00	**4728 10.040**
40	12	24	32	90	46	12.100	1.00	**4728 12.040**
40	14	27	34	90	46	14.100	1.50	**4728 14.040**
40	16	27	34	90	49	16.100	1.50	**4728 16.040**
40	18	33	42	90	49	18.100	2.00	**4728 18.040**
40	20	33	42	90	51	20.100	2.00	**4728 20.040**
40	25	44	53	100	57	25.100	2.00	**4728 25.040**
40	32	44	53	100	57	32.100	2.00	**4728 32.040**

GUHRING

The perfect combination from one reliable supplier: high performance milling cutters and GÜHROJET shrink fit chucks made by Gühring

Product information

- balancing quality G2.5 / 25,000 rev./min or U < 1 gmm
- incl. balancing thread 4xM6/6xM6
- MAS/BT to DIN ISO 7388-2 form JD/JF (AD/B)
- BT30 design JD without coolant supply via collar
- for tool shank tolerance h6

Scope of delivery

- incl. setting screw, article no. 4977 or 4904
- order pull studs, article no. 4927 or 4928, separately
- special dimensions on request

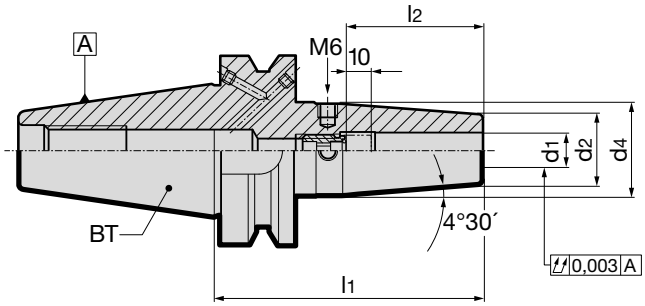

MAS/BT	for shank Ø $d_{1\ h6}$ mm	d_2 mm	d_4 mm	l_1 mm	l_2 mm	incl. setting screw art. no.	order no.	kg	Article no. 4739 Order no.
30	3	10	18	80	30	4904	5.016	0.60	**4739 3.030**
30	4	10	18	80	35	4904	6.016	0.60	**4739 4.030**
30	5	10	18	80	40	4904	8.018	0.60	**4739 5.030**
30	6	21	27	80	36	4977	6.014	0.70	**4739 6.030**
30	8	21	27	80	36	4977	8.014	0.70	**4739 8.030**
30	10	24	32	80	41	4977	10.014	0.80	**4739 10.030**
30	12	24	32	80	46	4977	12.014	0.80	**4739 12.030**
30	14	27	34	80	46	4977	12.014	0.80	**4739 14.030**
30	16	27	34	80	49	4977	16.014	0.80	**4739 16.030**
30	18	33	42	90	49	4977	16.014	0.90	**4739 18.030**
30	20	33	42	90	51	4977	20.114	0.90	**4739 20.030**
40	3	10	18	85	30	4904	5.016	1.00	**4739 3.040**
40	4	10	18	85	35	4904	6.016	1.00	**4739 4.040**
40	5	10	18	85	40	4904	8.018	1.00	**4739 5.040**
40	6	21	27	90	36	4977	6.014	1.20	**4739 6.040**
40	8	21	27	90	36	4977	8.014	1.20	**4739 8.040**
40	10	24	32	90	41	4977	10.014	1.30	**4739 10.040**
40	12	24	32	90	46	4977	12.014	1.30	**4739 12.040**
40	14	27	34	90	46	4977	12.014	1.40	**4739 14.040**
40	16	27	34	90	49	4977	16.014	1.40	**4739 16.040**
40	18	33	42	90	49	4977	16.014	1.40	**4739 18.040**
40	20	33	42	90	51	4977	20.114	1.70	**4739 20.040**
40	25	44	53	100	57	4977	20.114	1.80	**4739 25.040**
40	32	44	53	100	61	4977	20.114	1.70	**4739 32.040**
40	6	21	27	130	36	4977	6.014	1.30	**4739 6.140**
40	8	21	27	130	36	4977	8.014	1.30	**4739 8.140**
40	10	24	32	130	41	4977	10.014	1.40	**4739 10.140**
40	12	24	32	130	46	4977	12.014	1.40	**4739 12.140**
40	14	27	34	130	46	4977	12.014	1.40	**4739 14.140**
40	16	27	34	130	49	4977	16.014	1.50	**4739 16.140**
40	18	33	42	130	49	4977	16.014	1.50	**4739 18.140**
40	20	33	42	130	51	4977	20.114	1.80	**4739 20.140**
40	25	44	53	130	57	4977	20.114	2.00	**4739 25.140**
40	32	44	53	130	61	4977	20.114	1.90	**4739 32.140**
50	6	21	27	100	36	4977	6.014	2.90	**4739 6.050**
50	8	21	27	100	36	4977	8.014	2.90	**4739 8.050**
50	10	24	32	100	41	4977	10.014	2.90	**4739 10.050**
50	12	24	32	100	46	4977	12.014	2.90	**4739 12.050**
50	14	27	34	100	46	4977	12.014	3.00	**4739 14.050**
50	16	27	34	100	49	4977	16.014	3.00	**4739 16.050**
50	18	33	42	100	49	4977	16.014	1.90	**4739 18.050**
50	20	33	42	100	51	4977	20.114	1.90	**4739 20.050**
50	25	44	53	110	57	4977	20.114	2.20	**4739 25.050**
50	32	44	53	110	61	4977	20.114	2.20	**4739 32.050**

Product information

- for clamping in hydraulic chucks or shrink fit chucks
- suitable for internal cooling
- we recommend the use of special cooling adaptors article no. 4419
- for carbide tool shanks in tolerance h6 (from d1 14 mm also HSS possible)
- concentricity
  up to l1 125 mm < 0,003 mm
  up to l1 200 mm < 0,005 mm
  up to l1 250 mm < 0,007 mm

Scope of delivery

- incl. setting screw, article no. 4977 or 4904
- special dimensions on request

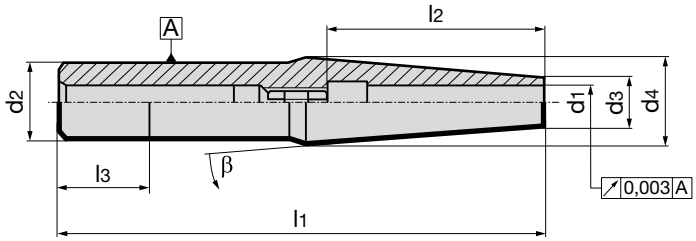

for shank Ø $d_{1\ h6}$ mm	$d_{2\ h6}$ mm	d_3 mm	d_4 mm	l_1 mm	l_2 mm	l_3 mm	incl. setting screw art. no.	order no.	β	type	Article no. 4719 Order no.
3	16	7	16	115	30	–	4904	5.016	4	–	4719 3.016
4	16	7	16	115	35	–	4904	6.016	4	–	4719 4.016
5	16	8	16	115	40	–	4904	8.018	4	–	4719 5.016
6	16	10	16	115	36	–	4977	6.014	4	–	4719 6.016
8	16	12	16	115	36	–	4977	8.014	4	–	4719 8.016
10	16	14	16	115	41	–	4977	10.014	4	–	4719 10.016
12	16	16	23.2	115	46	–	4977	12.014	4	–	4719 12.016
3	20	7	16.1	115	30	–	4904	5.016	4	–	4719 3.020
4	20	8	17.1	115	35	–	4904	6.016	4	–	4719 4.020
5	20	9	18.1	115	40	–	4904	8.018	4	–	4719 5.020
6	20	10	19.1	115	36	–	4977	6.014	4	–	4719 6.020
8	20	12	20	115	36	–	4977	8.014	4	–	4719 8.020
10	20	14	20	115	41	–	4977	10.014	4	–	4719 10.020
12	20	16	20	115	46	–	4977	12.014	4	–	4719 12.020
14	20	20	28.8	150	46	–	4977	12.014	4	–	4719 14.020
3	20	10	20	160	30	–	4904	5.016	4	–	4719 3.120
4	20	10	20	160	35	–	4904	6.016	4	–	4719 4.120
5	20	10	20	160	40	–	4904	8.018	4	–	4719 5.120
6	20	14	20	160	36	–	4977	6.014	4	–	4719 6.120
8	20	14	20	160	36	–	4977	8.014	4	–	4719 8.120
10	25	20	25	160	41	–	4977	10.014	4	–	4719 10.125
12	25	20	25	160	46	–	4977	12.014	4	–	4719 12.125
14	25	20	28.8	150	46	–	4977	12.014	4	–	4719 14.025
14	25	20	29	160	46	–	4977	12.014	4	–	4719 14.125
16	25	24	33	160	49	–	4977	16.014	4	–	4719 16.025
16	25	22	33	150	49	–	4977	16.014	4	–	4719 16.125
18	32	27	32	160	49	–	4977	16.014	4	–	4719 18.132
20	32	27	32	160	51	–	4977	20.114	4	–	4719 20.132
3	20	10	20	200	30	–	4904	5.016	4	–	4719 3.220
4	20	10	20	200	35	–	4904	6.016	4	–	4719 4.220
5	20	10	20	200	40	–	4904	8.018	4	–	4719 5.220
6	20	14	20	200	36	–	4977	6.014	4	–	4719 6.220
8	20	14	20	200	36	–	4977	8.014	4	–	4719 8.220
10	25	20	25	200	41	–	4977	10.014	4	–	4719 10.225
12	25	20	25	200	46	–	4977	12.014	4	–	4719 12.225
14	32	20	32	200	46	–	4977	12.014	4	–	4719 14.232
16	32	24	32	200	49	–	4977	16.014	4	–	4719 16.232
18	32	27	32	200	49	–	4977	16.014	4	–	4719 18.232
20	32	27	32	200	51	–	4977	20.114	4	–	4719 20.232
6	12	10	12	125	38	–	–		3	HR	4719 6.012
8	14	12	14	125	38	–	–		3	HR	4719 8.014
10	16	14	16	160	42	–	–		3	HR	4719 10.116
12	20	16	20	160	47	–	–		3	HR	4719 12.120
16	25	22	25	160	50	–	–		3	HR	4719 16.225
20	32	27	32	160	52	–	–		3	HR	4719 20.332
6	12	10	12.2	200	38	47	–		3	HR	4719 6.312
8	14	12	14.2	200	38	47	–		3	HR	4719 8.314
10	16	14	16.2	250	42	50	–		3	HR	4719 10.316
12	20	16	20.2	250	47	52	–		3	HR	4719 12.320
16	25	22	25.2	250	50	58	–		3	HR	4719 16.325
20	32	27	32.2	250	52	62	–		3	HR	4719 20.342

Product information

- for shrink fit and hydraulic chucks
- for length pre-setting of the setting screw with the cutting tool (less difference dimension l2, see sketch)
- flexibly mounted hexagonal key SW1/SW2
- with standard screws suitable for wet application article no. 4900, 4941, 4977
- suitable with MQL setting screws article no. 4621, 4919, 4937

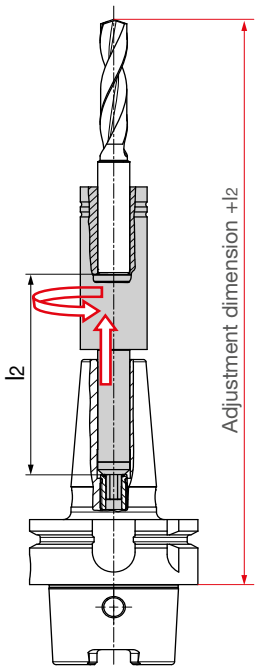

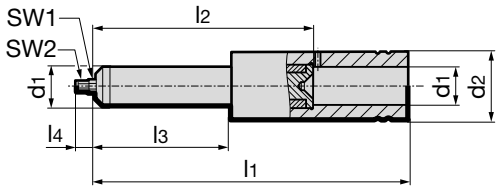

									Article no.	4718
d_1 mm	d_2 mm	l_1 mm	l_2 mm	l_3 mm	l_4 mm	SW design	SW1	SW2		Order no.
6	25	115	80	50	10	flexible	2.0	1.5		**4718 6.001**
6	25	115	80	50	10	flexible	3.0	2.5		**4718 6.000**
6	25	115	80	50	8	rigid	4.0	-		**4718 6.002**
8	25	115	80	50	10	flexible	2.0	1.5		**4718 8.001**
8	25	115	80	50	10	flexible	3.0	-		**4718 8.000**
8	25	115	80	50	8	rigid	4.0	-		**4718 8.002**
10	25	115	80	50	10	flexible	2.0	1.5		**4718 10.001**
10	25	115	80	50	10	flexible	4.0	3.0		**4718 10.000**
12	25	115	80	50	10	flexible	2.0	1.5		**4718 12.001**
12	25	115	80	50	10	flexible	5.0	-		**4718 12.000**
12	25	115	80	50	10	flexible	4.0	3.0		**4718 12.002**
14	25	115	80	50	10	flexible	2.0	1.5		**4718 14.001**
14	25	115	80	50	10	flexible	5.0	-		**4718 14.000**
14	25	115	80	50	10	flexible	4.0	3.0		**4718 14.002**
16	25	120	85	55	10	flexible	2.0	1.5		**4718 16.001**
16	25	120	85	55	10	flexible	6.0	5.0		**4718 16.000**
16	25	120	85	55	10	flexible	4.0	3.0		**4718 16.002**
18	30	120	85	55	10	flexible	2.0	1.5		**4718 18.001**
18	30	120	85	55	10	flexible	6.0	5.0		**4718 18.000**
18	30	120	85	55	10	flexible	4.0	3.0		**4718 18.002**
20	30	135	90	65	10	flexible	3.0	2.0		**4718 20.001**
20	30	135	90	65	10	flexible	8.0	5.0		**4718 20.000**
20	30	135	90	65	10	flexible	4.0	-		**4718 20.002**
25	35	140	100	70	10	flexible	3.0	2.0		**4718 25.001**
25	35	140	100	70	10	flexible	8.0	5.0		**4718 25.000**
25	35	140	100	70	10	flexible	4.0	-		**4718 25.002**
32	45	150	100	70	10	flexible	3.0	2.0		**4718 32.001**
32	45	150	100	70	10	flexible	8.0	5.0		**4718 32.000**
32	45	150	100	70	10	flexible	4.0	-		**4718 32.002**

Setting screws for GÜHROJET shrink fit chucks

Product information
- setting screws for GÜHROJET-shrink fit chucks article no. 4755
- slotted for reliable coolant supply for conventional internal cooling

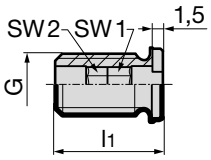

				Article no.	4938
for clamping-Ø	l_1 mm	G	SW1	SW2	Order no.
6	14	M5	2.5	2.5	**4938 6.000**
8	14	M6	3.0	3.0	**4938 8.000**
10	14	M8x1	4.0	4.0	**4938 10.000**
12/14	14	M10x1	5.0	5.0	**4938 12.000**
16/18	14	M12x1	6.0	6.0	**4938 16.000**
20/25/32	14	M16x1	8.0	6.0	**4938 20.000**

Shrink fit chuck length setting screw with axial force damping

Product information
- for shrink fit chucks
- for conventional internal cooling
- with facing stop for standard shank ends
- with patented axial force damping. O-ring reduces the concentricity error when shrink fitting on the setting screw

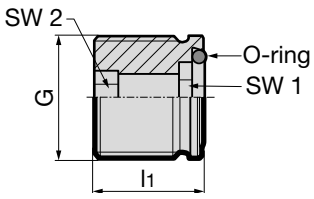

					Article no.	4977
for clamping-Ø	l_1 mm	G	SW1	SW2	O-ring	Order no.
6	14	M5	2.5	2.5	3x1	**4977 6.014**
8	14	M6	3.0	3.0	3.5x1	**4977 8.014**
10	14	M8x1	4.0	4.0	6x1	**4977 10.014**
12/14	14	M10x1	5.0	5.0	6x1	**4977 12.014**
16/18	14	M12x1	6.0	6.0	7.5x1.5	**4977 16.014**
20/25/32	14	M16x1	8.0	6.0	10x1.5	**4977 20.114**
20/25	14	M16x1	6.0	6.0	12x1.5	**4977 20.014**

Length setting screws for conventional cooling

Product information

- To adapt MQL tool holders to meet the requirements of conventional wet machining. For plain end shanks.The height of screw head compensates the height of MQL taper.
- for MQL HSK-A shrink fit chucks hydraulic chucks
- for use with shank according to DIN 6535 with plain shank end for conventional cooling
- The patented face orientated o-ring provides axial force clamping which eliminates concentricity errors

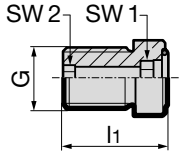

					Article no.	4941
for HSK-A	per clamping-Ø	G	l_1 mm	SW1	SW2	Order no.
32/40	6	M5	14.9	2.5	2.5	4941 6.041
40	6	M7x1	15.0	2.5	2.5	4941 6.040
32/40	8	M7x1	16.2	3	3	4941 8.040
50	6	M8x1	14.0	2.5	2.5	4941 6.050
50	8	M8x1	18.0	3	3	4941 8.050
32/40/50	10	M8x1	16.2	4	4	4941 10.050
63/80/100	6	M10x1	17.0	2.5	2.5	4941 6.100
63/80/100	8	M10x1	17.0	3	3	4941 8.100
63/80/100	10	M10x1	16.2	4	4	4941 10.100
32/40/50/63/80/100	12	M10x1	16.0	5	5	4941 12.100
40/50/63/80/100	14	M10x1	17.2	5	5	4941 14.100
50/63/80/100	16	M12x1	18.2	6	6	4941 16.100
50/63/80/100	18	M12x1	19.2	6	6	4941 18.100
50/63/80/100	20	M16x1	19.2	6	8	4941 20.100
63/80/100	25	M16x1	22.7	6	8	4941 25.100
63/80/100	32	M16x1	26.7	6	8	4941 32.100

Setting screws

Product information

- for HSK-A side lock holders with bore to DIN 1835-2, form E, shrink fit chuck and shrink fit extensions

Scope of delivery

- minimum order quantity 5

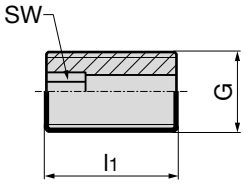

			Article no.	4904
G	l_1 mm	SW		Order no.
M5	16	2.5		4904 5.016
M5	20	2.5		4904 5.020
M6	16	3.0		4904 6.016
M6	20	3.0		4904 6.020
M8	12	3.0		4904 8.012
M8	18	4.0		4904 8.018
M10	17	3.0		4904 10.017
M10	20	5.0		4904 10.020
M12	14	3.0		4904 12.014
M12	20	5.0		4904 12.020
M16	25	5.0		4904 16.025
M20	25	6.0		4904 20.025

SHRINK FIT TECHNOLOGY
RF 100

MILLING AT THE HIGHEST LEVEL

TSG 3000 shrink fit chucks and Ratio end mills RF 100

- secure tool clamping
- perfect concentricity
- vibration-free operation
- optimal surface finish
- long tool life

Please request our catalogue "Milling Tools".

MQL conversion of tool holders for conventional cooling

With the assistance of Gühring's MQL length adjustment screw, article no. 4919, and MQL coolant supply set, article no. 4924, tool holders such as shrink fit chucks, article no. 4736, from Gühring's GM 300 program can be converted for application under MQL conditions and automatic tool clamping. This combination is suitable for 2-channel MQL systems (not suitable for application on machines with supply collar to DIN 69090-2). The insertion depth is reduced by the length of the cone on the MQL shank and does not correspond with our Gühring standard. Special solutions for SK/BT are available on request.

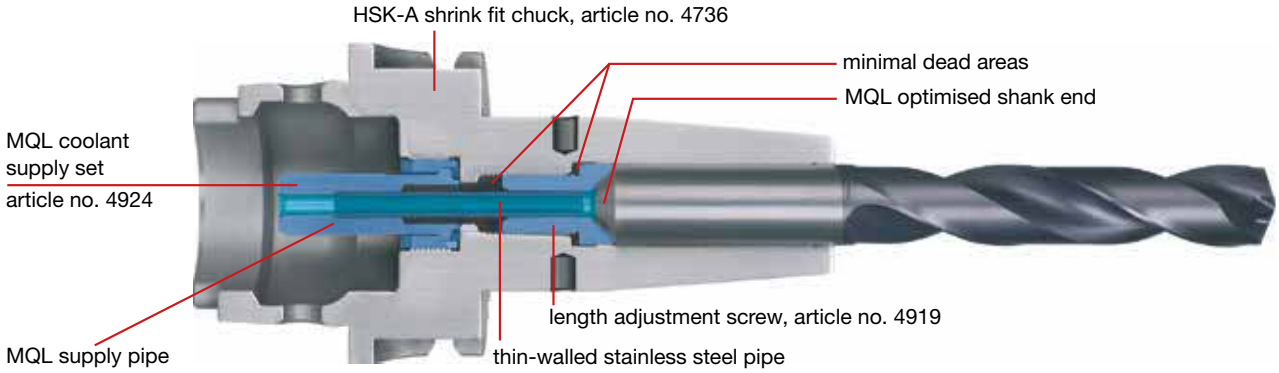

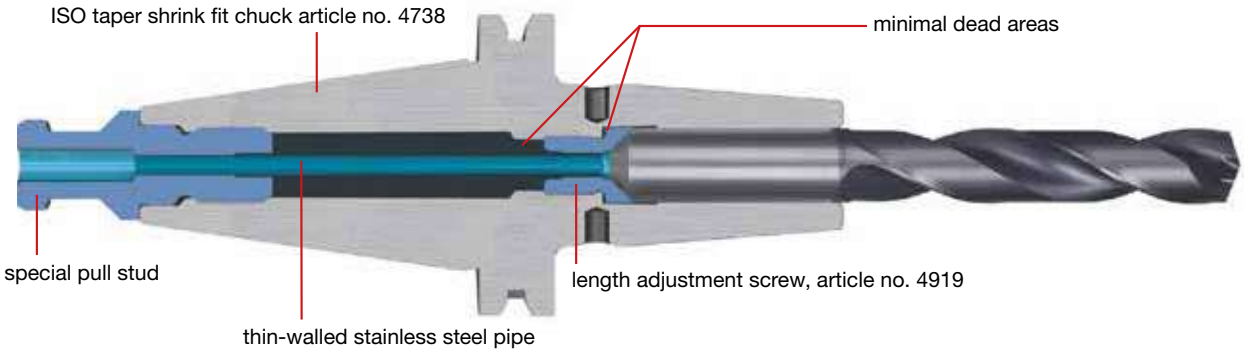

MQL length setting screws to convert

Product information

- for hydraulic chucks and shrink fit chucks
- with special geometry optimised for MQL
- with conical end for tapered MQL shank ends

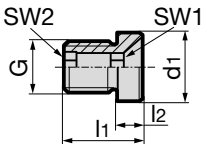

				Article no.	4919
d_1 mm	l_1 mm	G	SW1	SW2	Order no.
6	14.8	M5	2.5	2.5	**4919 6.000**
8	15.6	M6	3.0	3.0	**4919 8.000**
10	16.1	M8x1	4.0	4.0	**4919 10.000**
10	16.6	M8x1	3.0	3.0	**4919 10.040**
10	16.6	M6	3.0	3.0	**4919 10.032**
12	16.6	M10x1	5.0	5.0	**4919 12.000**
12	17.6	M6	3.0	3.0	**4919 12.032**
14	17.6	M10x1	5.0	5.0	**4919 14.000**
14	18.6	M6	3.0	3.0	**4919 14.040**
16	18.6	M12x1	5.0	5.0	**4919 16.000**
16	19.6	M6	3.0	3.0	**4919 16.040**
18	19.6	M12x1	5.0	5.0	**4919 18.000**
20	20.6	M16x1	5.0	5.0	**4919 20.000**
25	22.6	M16x1	8.0	6.0	**4919 25.000**
32	26.1	M16x1	8.0	6.0	**4919 32.000**

Product information

- replace conventional coolant supply sets, article no. 4949, when applying MQL
- for shrink fit chucks to DIN 69882-8
- Attention:
  Not suitable for application on machines with supply collar to DIN 69090-2

Scope of delivery

- complete MQL coolant supply sets

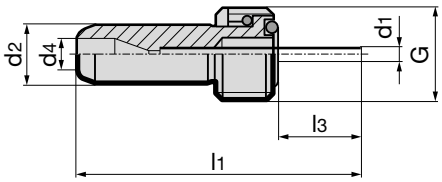

								Article no.	4924
for HSK-A	clamping-Ø mm	d_1 mm	d_2 mm	d_4 mm	l_1 mm	l_3 mm	G		Order no.
32	6	2.5	6	3.5	45.1	18.9	M10x1		**4924 32.020**
32	10	3.0	6	3.5	45.7	19.5	M10x1		**4924 32.060**
32	8/12	3.0	6	3.5	45.2	19.0	M10x1		**4924 32.080**
40	6	2.5	8	4.0	56.0	26.9	M12x1		**4924 40.020**
40	8	3.0	8	4.0	56.2	27.0	M12x1		**4924 40.040**
40	10	3.0	8	4.0	51.7	22.5	M12x1		**4924 40.060**
40	12/14	3.0	8	4.0	57.2	28.0	M12x1		**4924 40.100**
40	16	3.0	8	4.0	54.2	25.0	M12x1		**4924 40.120**
50	6	2.5	10	4.0	55.4	22.7	M16x1		**4924 50.020**
50	8	3.0	10	4.0	46.5	13.8	M16x1		**4924 50.040**
50	10	4.0	10	4.0	46.1	13.4	M16x1		**4924 50.060**
50	12	5.0	10	4.0	55.7	23.0	M16x1		**4924 50.080**
50	14	5.0	10	4.0	55.7	22.9	M16x1		**4924 50.100**
50	16/18	5.0	10	4.0	57.7	25.0	M16x1		**4924 50.140**
50	20	5.0	10	4.0	60.7	28.0	M16x1		**4924 50.160**
63	6	2.5	12	4.0	56.7	20.5	M18x1		**4924 63.020**
63	6	2.5	12	4.0	137.7	101.4	M18x1		**4924 63.021**
63	8	3.0	12	4.0	57.0	20.8	M18x1		**4924 63.040**
63	8	3.0	12	4.0	137.0	100.7	M18x1		**4924 63.041**
63	10	4.0	12	4.0	55.7	19.5	M18x1		**4924 63.060**
63	10	4.0	12	4.0	132.2	95.9	M18x1		**4924 63.061**
63	12/14	5.0	12	4.0	55.7	19.5	M18x1		**4924 63.080**
63	12/14	5.0	12	4.0	127.1	90.8	M18x1		**4924 63.081**
63	16/18	5.0	12	4.0	57.5	21.3	M18x1		**4924 63.100**
63	16/18	5.0	12	4.0	124.3	88.0	M18x1		**4924 63.141**
63	20	5.0	12	4.0	60.7	24.5	M18x1		**4924 63.110**
63	20	5.0	12	4.0	122.1	85.8	M18x1		**4924 63.161**
63	25	6.0	12	4.0	69.0	32.8	M18x1		**4924 63.130**
63	25	6.0	12	4.0	116.2	79.9	M18x1		**4924 63.181**
63	32	6.0	12	4.0	70.7	34.5	M18x1		**4924 63.140**
63	32	6.0	12	4.0	112.2	75.9	M18x1		**4924 63.201**
80	6	2.5	14	4.0	61.2	21.9	M20x1.5		**4924 80.020**
80	8	3.0	14	4.0	61.3	22.0	M20x1.5		**4924 80.040**
80	10	4.0	14	4.0	61.3	22.0	M20x1.5		**4924 80.060**
80	12/14	5.0	14	4.0	61.3	22.0	M20x1.5		**4924 80.100**
80	16/18	5.0	14	4.0	63.3	24.0	M20x1.5		**4924 80.140**
80	20	5.0	14	4.0	66.3	27.0	M20x1.5		**4924 80.160**
80	25	6.0	14	4.0	70.3	31.0	M20x1.5		**4924 80.180**
80	32	6.0	14	4.0	71.3	32.0	M20x1.5		**4924 80.200**
100	6	2.5	16	4.0	63.9	20.1	M24x1.5		**4924 100.020**
100	8	3.0	16	4.0	64.6	20.8	M24x1.5		**4924 100.040**
100	10	4.0	16	4.0	63.3	19.5	M24x1.5		**4924 100.060**
100	12/14	5.0	16	4.0	63.3	19.5	M24x1.5		**4924 100.100**
100	16/18	5.0	16	4.0	65.3	21.5	M24x1.5		**4924 100.140**
100	20	5.0	16	4.0	68.3	24.5	M24x1.5		**4924 100.160**
100	25	6.0	16	4.0	72.3	28.5	M24x1.5		**4924 100.180**
100	32	6.0	16	4.0	73.3	29.5	M24x1.5		**4924 100.200**

GSS 2000

Simple operation

The movement of the spindle and its heating is a single handed operation.
Tool clamping cannot be simpler and quicker!

Quick cooling

The water-cooled cooling elements cool down the shrink fit chuck quickly and safely. The shrink fit chuck remains clean and dry, **so that it can be applied again without drying and without rusting**. Hot spots remain safely screened during the cooling process in order to prevent burns.

Safe shrink fitting

The minimal heating of the shrink fit chuck ensures **maximum operating safety** on the one hand, on the other the controlled heating ensures the **long life** of the shrink fit chuck.

The control panel

The clear control panel with display makes the operation of the GSS 2000 **very user-friendly.**

Benefit from the advantages of GSS 2000

GSS 2000

Efficient operation

The turntable allows simultaneous preparation, heating and cooling of the shrink fit chucks. **Subsequently, there is no waiting time, tool clamping is seamless and with maximum efficiency.**

All under control

Practical locations and compartments provide room for accessories such as stop discs or gloves in close proximity to the equipment. **Thus all the necessary components are always at hand.**

- **high-performance spindle,** hence quick change time
- **overheating protection** for holder
- **automatic mode** possible (equipment automatically selects the correct heating program)
- **error detection** choosing wrong chuck/program
- **heating programs** for standard/reinforced and very small holder/shrink fit extensions
- **maximum rigidity**
- **highest cutting rates**

GSS 2000 Comfort version

Product information
- 3-station system with turntable

Scope of delivery
- incl. base system with turntable
- incl. induction coil article no. 4743 / version 2008
- incl. 1 limit stop collar set article no. 4769 / version 2008
- incl. SpeedCooler article no. 4747
- incl. 1 pair of gloves article no. 4750
- with integrated SpeedCooler-Manager

- order HSK-/ISO-holders article nos. 4745, 4744 separately!

Article no.	4742
	Order no.
European version 50/60 Hz / 400-480 V, SpeedCooler 230 V	**4742 10.000**
US version 50/60 Hz / 400-480 V, SpeedCooler 115 V	**4742 20.000**

GSS 2000 HSK holders

Product information
- for GSS 2000 Comfort Plus article no. 4742

- holder (spider) for turn-table to hold max. 3 shrink fit chucks

Article no.	4745
for HSK-A/C/E	**Order no.**
32	**4745 32.000**
40	**4745 40.000**
50	**4745 50.000**
63	**4745 63.000**
80	**4745 80.000**
100	**4745 100.000**

GSS 2000 ISO taper holders

Product information
- for GSS 2000 Comfort Plus article no. 4742
- also suitable for MAS-BT

- holder (spider) for turn-table to hold max. 3 shrink fit chucks

Article no.	4744
for ISO taper and BT	**Order no.**
30	**4744 30.000**
40	**4744 40.000**
50	**4744 50.000**

System cart

Product information
- for GSS 2000
- for mobile and stationary application
- systematic storage of cooler and accessories

	Article no.	4748
		Order no.
System cart		4748 1.000

Swivel compartments for GSS 2000

Product information
- for the clean storage of GSS shrink fit system accessories, i.e. limit stop washers, gloves, measuring instruments etc.
-
- suitable for GSS 2000 Comfort Plus and ECO Plus article no. 4742 and 4752

Scope of delivery
- swivel compartment does not include accessories shown

	Article no.	4763
		Order no.
Swivel compartments for GSS 2000 accessories		4763 1.000

Tongs

Product information
- for the safe handling of hot tools

	Article no.	4749
		Order no.
Tongs		4749 1.000

Cooling adaptor set, complete

Product information

- cooling adaptor set for shrink fit system GSS 2000 Comfort Plus and ECO Plus article no. 4742 and 4752
- for inserting in the cooling adaptor Ø 14-16, in order to effectively and safely cool the small shrink fit holders with clamping diameter Ø 3-5

	Article no.	4419
for cooling adaptor	for shank Ø	Order no.
Ø14-16	Ø 3-5	4419 5.000

Protective gloves

Product information

- Kevlar gloves providing protection against sharp cutting edges and high temperatures
- as specified for all shrink fit applications

	Article no.	4750
		Order no.
Protective gloves		4750 1.000

Gühring shrink fit and pre-setting equipment - high quality and accuracy

GSS 2000 Eco-Plus

Product information
- 1-place system

Scope of delivery
- incl. base system
- incl. induction coil article no. 4743 / version 2008
- incl. 1 limit stop collar set article no. 4769 / version 2008
- incl. SpeedCooler article no. 4747
- incl. 1 pair of gloves article no. 4750
- with integrated SpeedCooler-Manager

- order HSK-/ISO-holders article nos. 4761, 4762 separately!

	Article no.	4752
		Order no.
European version 50/60 Hz / 400-480 V, SpeedCooler 230 V		**4752 10.000**
US version 50/60 Hz / 400-480 V, SpeedCooler 115 V		**4752 20.000**

HSK holder carriers GSS 2000

Product information
- for GSS 2000 Basic and ECO Plus article no. 4730 and 4752
- holder carriers for HSK shrink fit chucks

Article no.	4761
for HSK- A/C/E	Order no.
32	**4761 32.000**
40	**4761 40.000**
50	**4761 50.000**
63	**4761 63.000**
80	**4761 80.000**
100	**4761 100.000**

ISO taper holder carriers GSS 2000

Product information
- for GSS 2000 Basic and ECO Plus article no. 4730 and 4752
- also suitable for MAS-BT
- holder carriers for SK or MAS/BT shrink fit chucks

Article no.	4762
for ISO taper and BT	Order no.
30	**4762 30.000**
40	**4762 40.000**
50	**4762 50.000**

GSS 2000 Basic

Product information
- 1-place system

Scope of delivery
- incl. base system
- incl. 1 limit stop collar set article no. 4769 / version 2008
- incl. 1 pair of gloves article no. 4750

- order HSK-/ISO-holders article nos. 4761, 4762 separately!

Article no.	4730
	Order no.
Version 50/60 Hz / 400-480 V	4730 10.000

HSK holder carriers GSS 2000

Product information
- for GSS 2000 Basic and ECO Plus article no. 4730 and 4752
- holder carriers for HSK shrink fit chucks

Article no.	4761
for HSK- A/C/E	Order no.
32	4761 32.000
40	4761 40.000
50	4761 50.000
63	4761 63.000
80	4761 80.000
100	4761 100.000

ISO taper holder carriers GSS 2000

Product information
- for GSS 2000 Basic and ECO Plus article no. 4730 and 4752
- also suitable for MAS-BT
- holder carriers for SK or MAS/BT shrink fit chucks

Article no.	4762
for ISO taper and BT	Order no.
30	4762 30.000
40	4762 40.000
50	4762 50.000

SpeedCooler Cooling system

Product information
- for GSS 2000 Comfort Version and Eco-Plus

Article no.	4747
	Order no.
European version 50/60 Hz, 230 V	**4747 1.000**
US version 50/60 Hz, 115 V	**4747 2.000**

SpeedCooler Manager

Product information
- for automatic switch on and off of the SpeedCooler
- preserves the cooling system and reduce the service intervals

Article no.	4759
	Order no.
European version 50/60 Hz, 230 V	**4759 1.000**
US version 50/60 Hz, 115 V	**4759 2.000**

Induction coil

Product information
- for GSS 2000 / version 2008
- HSS for Ø 6…32 mm, carbide for Ø 3…32 mm

Article no.	4743
Ø range mm	**Order no.**
3…32	**4743 32.000**

Limit stop collars

Product information
- for induction coil
- suitable for all GSS systems
- for extra short standard shrink fit chucks with order no. ….,100

Article no.	4769
for tool shank diameter	**Order no.**
3 - 5 mm	**4769 5.000**
6 - 12 mm	**4769 12.000**
14 - 16 mm	**4769 16.000**
18 - 20 mm	**4769 20.000**
25 - 32 mm	**4769 32.000**
6 - 12 mm	**4769 12.100**
14 - 20 mm	**4769 20.100**
25 - 32 mm	**4769 32.100**

GSS 3001

Work easily, quickly and efficiently ...

The advantages of shrink fit technology:

- **Perfect 360º tool clamping provides extreme clamping force and rigidity**
- **High repeatability**
- **Minimal imbalance thanks to rotational symmetry**
- **Excellent concentricity for symmetrical cutting edge loading – therefore longer tool life**
- **Reduced components, therefore lower costs for purchasing, storage and administration**

You benefit from:

- **High economic efficiency thanks to effective mode of operation**
- **Full transparency due to process analysis**
- **Absolutely user-friendly**

User-friendly software

Intuitive menu navigation similar to the well-established Gühring TM-Software GTMS via touch-screen monitor (for details see page 67).

... with each application!

Safe shrink fitting

The minimal heating of the shrink fit chuck ensures **maximum operating safety** on the one hand, on the other the controlled heating ensures the **long life** of the shrink fit chuck.

Length setting

During the shrink fit process the tool is pre-set to the **required length** with the assistance of an adjustment rod.

Fume extraction

Vapours produced during the shrink fit process are **removed and filtered under controlled conditions** by the fume extraction system.

Quick cooling

The water-cooled cooling elements cool down the shrink fit chuck quickly and safely. The shrink fit chuck remains clean and dry, **so that it can be applied again without drying and without rusting**. Hot spots remain safely screened during the cooling process in order to prevent burns.

Tool identification Codier-Chip

The read and write function of the Codier-Chip art. no. 4955 simplifies **tool identification**. Tool life can be managed.

Label printer

Print data such as article no., current setting dimension, date, operator etc. on an **adhesive label** for your pre-set tool.

GSS 3001

Important features:

> Setting, shrink fitting and measuring with one system

> Operating system WIN 7

> Stable Beckhoff control system with touch-screen and foil keyboard

> Compact, workshop suited and robust design

> Ergonomic arrangement of all operating elements for comfortable handling

> Label printer for providing pre-set tools with information such as article no., setting dimension, barcode, and much more…

> Setting and measuring accuracy 0.02 mm

"Everything has its place"

Stop plates for every diameter are accessibly stored directly on the guide column.

"Good accessibility"

Good accessibility to all machine components provides excellent conditions for cleaning and maintenance purposes, i.e. re-filling coolant by simple opening of drawer.Economic: the Speedcooler switches off automatically when not in use for a longer period of time.

GSS Software performance features:

> Intuitive and user-friendly operation thanks to 12” touch-screen and Barcode scanner

> Comprehensive management possibilities for your tool, holder and shrink fit data as well as the associated parameters

> Analysis of all processes carried out by system (component, cost centre or user related; setting up to 5 cost centres possible) to optimise your production and for maximum transparency possible

> Software available in different languages

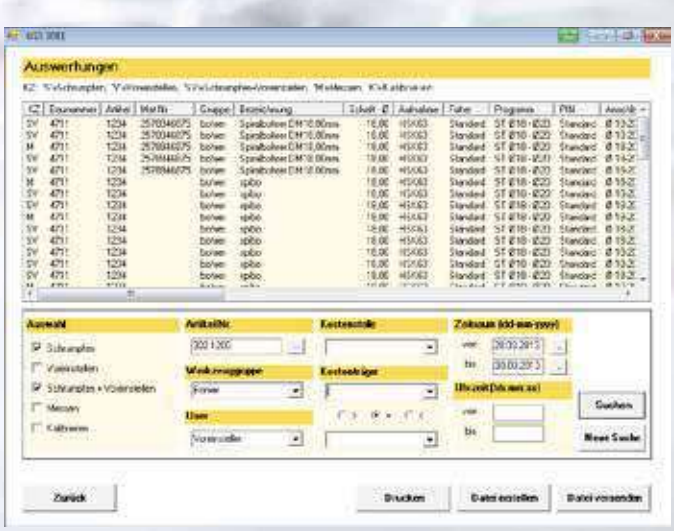

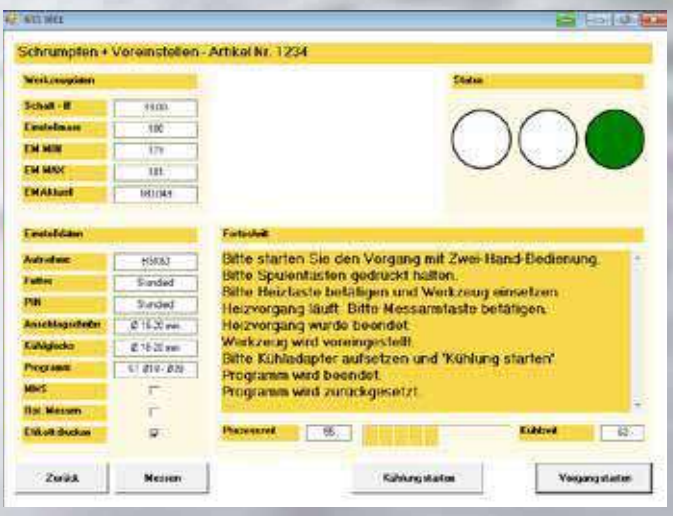

GSS
5000

GSS 5000

You can’t get more into a system!

In addition to the functions pre-setting, shrink fitting and measuring GSS 5000 also offers the possibility of a fully automatic cutting edge form recognition and length pre-setting. Depending on the configuration a measuring range up to 800 mm and a measuring diameter up to 600 mm can be covered.

- GSS 5000 can be adapted to customer requirements.

GÜHRING
GSS 5000
GÜHRING
GSS 5000
GÜHRING
GSS 5000

GÜHROSYNC

TAPPING CHUCKS

GÜHROSYNC

THE EASY WAY TO THE PERFECT THREAD

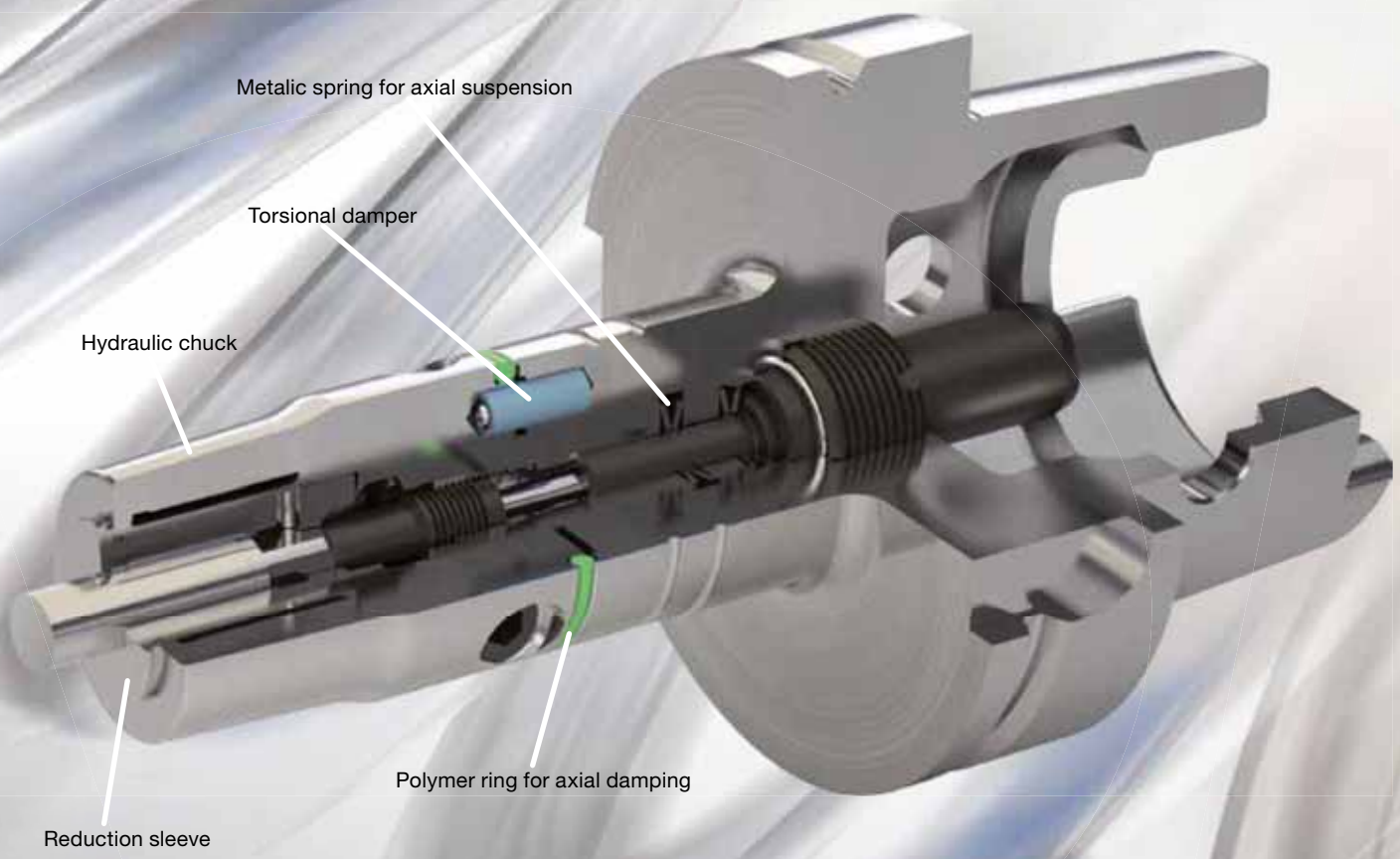

Intelligent design:
as well as the suspension and damping elements in the slender GÜHROSync chucks (for the reduction of axial and radial forces during the tapping process) there is also room for the supply set for MQL or conventional cooling lubrication and the length setting screw.

The optimal combination of long-life metal spring and polymer damping elements considerably reduces axial and radial forces

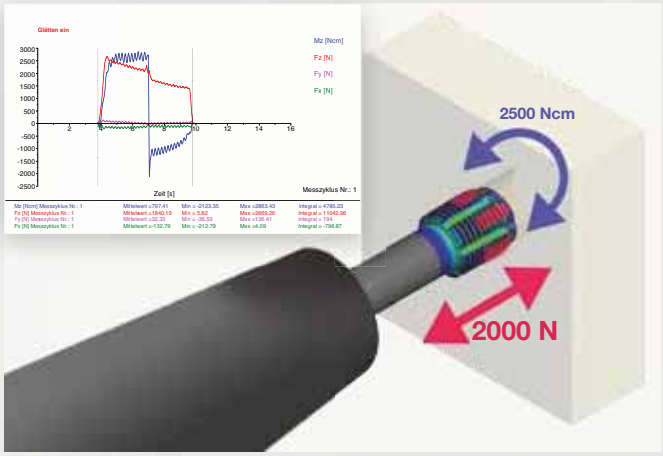

Rigid chuck

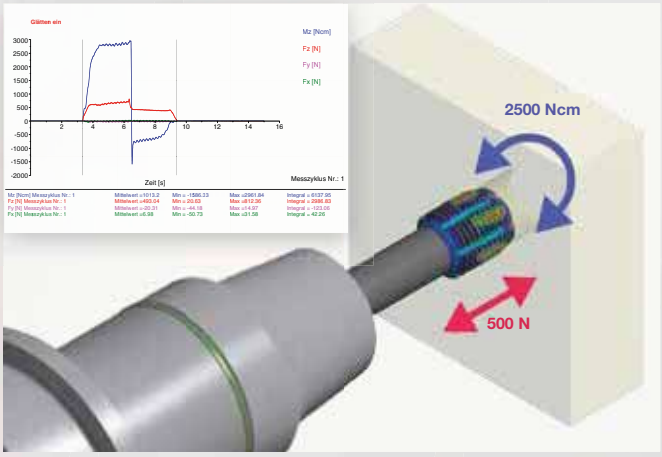

GÜHROSync

IMPROVED TOOL LIFE

IMPROVED THREAD QUALITY

GREATER PROCESS RELIABILITY

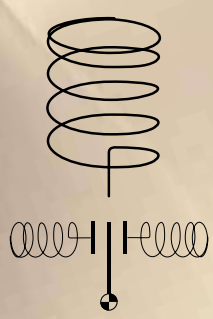

Made visible:
The spring symbol on the GÜHROSync displays the effect of axial and radial force.

Configuration of GÜHROSync synchro tapping chucks with straight shank for internal cooling

GÜHROSync

Shrink fit chucks

- **4736** HSK-A
- **4726** TSG 3000 HSK-A
- **4758** HSK-C
- **4738** ISO taper

Hydraulic synchro tapping chucks with increased clamping force

- **4221** MAS-BT
- **4299** HSK-A
- **4267** HSK-C
- **4213** ISO taper

4949 Coolant supply set HSK-A for conventional cooling

4925 **4926** Pull studs for SK

4927 **4928** Pull studs for MAS/BT

Hydraulic synchro tapping chucks

4601 HSK-A

Hydraulic synchro tapping chucks

4576 ISO taper

Hydraulic synchro tapping chucks

4577 MAS-BT

4525

Hydro-Ø 12 / Ø 20
Cylindrical hydraulic synchro tapping chucks Ø 20 with internal cooling

4364

Setting screws “face” synchro tapping chucks, with conventional int. cooling

4605 Reduction bush sealed

4606 GÜHROJET reduction bush

Threading tool:
shank diameter x square

Configuration of synchro tapping chucks for conventional cooling

Product information

- HSK-A to ISO 12164-1/DIN 69893-1
- compensates synchronisation errors
- guarantees high thread quality and optimal tool life
- minimal length compensation ± 0,3 mm in tension and compression direction balances very small pitch differences between synchro spindle and tap
- reduces an increase in axial forces during the cutting cycle to a minimum
- convenient hydraulic clamping using reduction bushes with active drive
- length-setting screw allows 3 mm readjustment
- suitable for internal cooling identifiable by black coloured ring
- coolant pressure up to max. 80 bar
- balancing quality: G6,3 / 15,000 rev./min

Scope of delivery

- incl. hexagon clamping key article no. 4912
- incl. adjustment key for adjustment screws

- order setting screw “face” article no. 4364 separately
- order reduction bushes article no. 4605 or 4606 separately
- for conventional cooling order coolant supply set article no. 4949 separately

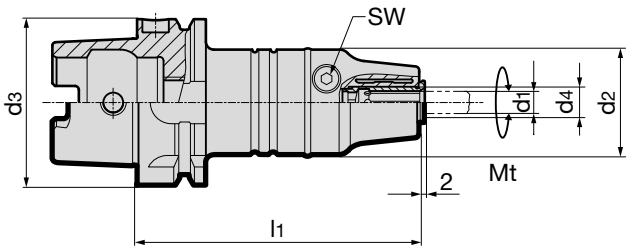

GÜHROSync

									Article no.	4601
HSK-A d_3	d_4 mm	for shank Ø d_1 x VKT	for thread	d_2 mm	l_1 mm	Mt max.	SW	kg		Order no.
63	12.00	2.8-10	M2-M12	40	106.5	26 Nm	4	1.5		**4601 12.063**
63	20.00	6-16	M4.5-M20	40	120.5	90 Nm	5	1.6		**4601 20.063**
100	12.00	2.8-10	M2-M12	40	113.0	26 Nm	4	2.8		**4601 12.100**
100	20.00	6-16	M4.5-M20	40	127.0	90 Nm	5	2.9		**4601 20.100**

Product information

- SK30 to DIN ISO 7388-1 form AD without coolant supply over collar
- SK40 to DIN ISO 7388-1 form AD/AF (AD/B)
- form AF supplied with threaded pins in bores
- compensates synchronisation errors
- guarantees high thread quality and optimal tool life
- minimal length compensation ± 0,3 mm in tension and compression direction balances very small pitch differences between synchro spindle and tap
- reduces an increase in axial forces during the cutting cycle to a minimum
- convenient hydraulic clamping using reduction bushes with active drive
- length-setting screw allows 3 mm readjustment
- suitable for internal cooling identifiable by black coloured ring
- coolant pressure up to max. 80 bar
- balancing quality: G6,3 / 15.000 rev./min

Scope of delivery

- incl. hexagon clamping key article no. 4912
- incl. adjustment key for adjustment screws

- order setting screw “face” article no. 4364 separately
- order reduction bushes article no. 4605 or 4606 separately
- order pull studs, article no. 4925 or 4926 separately

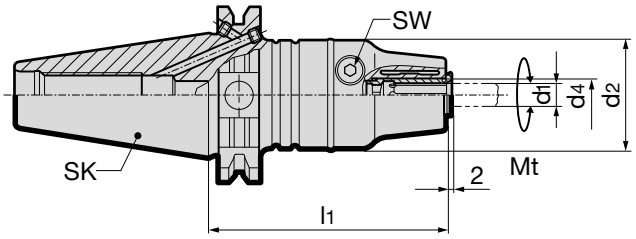

									Article no.	4576
SK	d_4 mm	for shank Ø d_1	for thread	d_2 mm	l_1 mm	Mt max.	SW	kg		Order no.
30	12.00	2.8-10	M2-M12	40	81	26 Nm	4	0.8		**4576 12.030**
30	20.00	6-16	M4.5-M20	40	95	90 Nm	5	0.9		**4576 20.030**
40	12.00	2.8-10	M2-M12	40	85	26 Nm	4	1.3		**4576 12.040**
40	20.00	6-16	M4.5-M20	40	99	90 Nm	5	1.4		**4576 20.040**

Product information

- MAS/BT30 to DIN ISO 7388-2 form JD without coolant over collar
- MAS/BT40 to DIN ISO 7388-2 form JD/JF (form AD/B)
- MAS/BT40 to JIS B 6339-2 form JD/JF (form AD/B)
- form JF supplied with threaded pins in bores
- compensates synchronisation errors
- guarantees high thread quality and optimal tool life
- minimal length compensation ± 0,3 mm in tension and compression direction balances very small pitch differences between synchro spindle and tap
- reduces an increase in axial forces during the cutting cycle to a minimum
- convenient hydraulic clamping using reduction bushes with active drive
- length-setting screw allows 3 mm readjustment
- suitable for internal cooling identifiable by black coloured ring
- coolant pressure up to max. 80 bar
- balancing quality: G6,3 / 15.000 rev./min

Scope of delivery

- incl. hexagon clamping key article no. 4912
- •ncl. adjustment key for adjustment screws

- order setting screw “face” article no. 4364 separately
- order reduction bushes article no. 4605 or 4606 separately
- order pull studs, article no. 4927 or 4928 separately

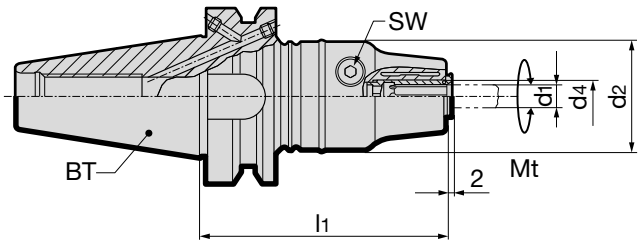

GÜHROSync

Article no.									4577
BT	d_4 mm	for shank Ø d_1	for thread	d_2 mm	l_1 mm	Mt max.	SW	kg	Order no.
30	12.00	2.8-10	M2-M12	40	81	26 Nm	4	0.8	**4577 12.030**
30	20.00	6-16	M4.5-M20	40	95	90 Nm	5	0.9	**4577 20.030**
40	12.00	2.8-10	M2-M12	40	85	26 Nm	4	1.3	**4577 12.040**
40	20.00	6-16	M4.5-M20	40	99	90 Nm	5	1.4	**4577 20.040**

Product information

- compensates synchronisation errors
- guarantees best thread quality and optimal life
- minimal length compensation ± 0,3 mm in tension and compression direction balances very small pitch differences between synchro spindle and tap
- reduces an increase in axial forces during the cutting cycle to a minimum
- convenient hydraulic clamping using reduction bushes with active drive
- length-setting screw allows 3 mm readjustment
- Type 1: straight shank for precision clamping chucks (hydraulic chucks or precision power chucks, shrink fit chucks for single application)
  Type 2: combination shank similar to DIN 1835 for side lock holders
- suitable for internal cooling identifiable by black coloured ring
- coolant pressure up to max. 80 bar

Scope of delivery

- incl. hexagon clamping key article no. 4912
- incl. adjustment key for adjustment screws

- order setting screw “face” article no. 4364 separately
- order reduction bushes article no. 4605 or 4606 separately

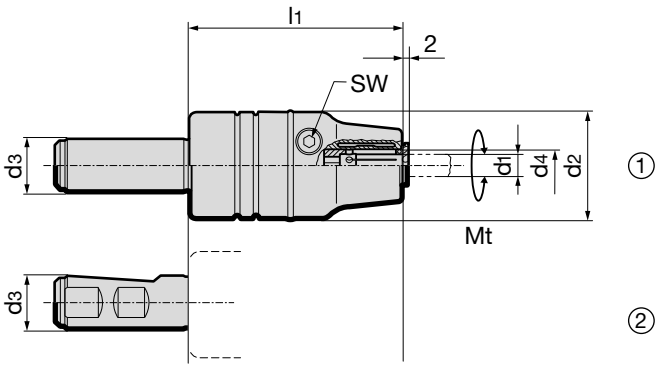

GÜHROSync

Article no.										4525
d_3 h6 mm	d_4 mm	type	for shank Ø d_1	for thread	d_2 mm	l_1 mm	Mt max.	SW	kg	Order no.
20	12.00	1	2.8-10	M2-M12	40	80	26 Nm	4	0.7	**4525 12.020**
20	20.00	1	6-16	M4.5-M20	40	94	90 Nm	5	0.8	**4525 20.020**
25	12.00	2	2.8-10	M2-M12	40	80	26 Nm	4	0.7	**4525 12.025**
25	20.00	2	6-16	M4.5-M20	40	94	90 Nm	5	0.8	**4525 20.025**

Product information

- for clamping taps with square shank in GÜHROSync synchro tapping chucks
- clamping-Ø for tool shank tolerance h6-h9
- face side closed, therefore coolant leak-proof for threading tools with IC
- positive drive
- position setting screw on tap shank
- length-setting screw allows 3 mm readjustment

Scope of delivery

- order setting screw “face” article no. 4364 separately
- order MQL setting screws article no. 4305 separately

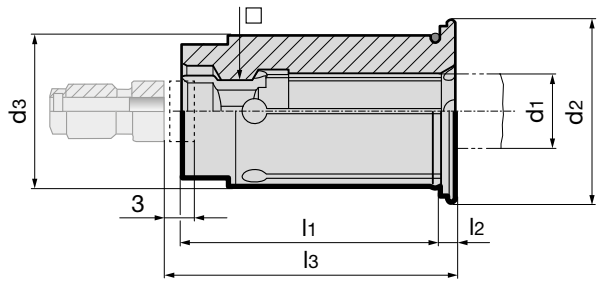

												Article no.	4605
d_3 mm	d_1 mm	□ mm	Standard	d_1 inch	□ inch	d_2 mm	l_1 mm	l_2 mm	l_3 mm	for adjustment screw	for thread		Order no.
12.00	2.800	2.100	DIN	-	-	16.50	29.00	2.00	-	-	M2/M2.2/M2.5 /M4		**4605 2.812**
12.00	3.500	2.700	DIN	-	-	16.50	29.00	2.00	-	-	M3 / M4.5 / M5		**4605 3.512**
12.00	4.000	3.200	JIS	-	-	16.50	29.00	2.00	-	-	M3 / M3.5		**4605 4.012**
12.00	4.500	3.400	DIN	-	-	16.50	29.00	2.00	26.00	4364 5.020	M4 / M6		**4605 4.512**
12.00	4.928	3.861	ANSI	0.194	0.152	16.50	29.00	2.00	26.00	4364 5.020	10-24 & 10-32		**4605 4.912**
12.00	5.000	4.000	JIS	-	-	16.50	29.00	2.00	26.00	4364 5.020	M4 / M4.5 / M5		**4605 5.012**
12.00	5.500	4.500	JIS	-	-	16.50	29.00	2.00	26.00	4364 5.020	M5		**4605 5.512**
12.00	5.588	4.191	ANSI	0.220	0.165	16.50	29.00	2.00	26.00	4364 5.020	12-24 & 12-28		**4605 15.512**
12.00	6.000	4.500	JIS	-	-	16.50	29.00	2.00	26.00	4364 6.020	M6		**4605 16.012**
12.00	6.000	4.900	DIN	-	-	16.50	29.00	2.00	26.00	4364 6.020	M4.5/M5/M6/M7/M8		**4605 6.012**
12.00	6.200	5.000	JIS	-	-	16.50	29.00	2.00	26.00	4364 6.020	M7 / M8		**4605 6.212**
12.00	6.477	4.851	ANSI	0.255	0.191	16.50	29.00	2.00	26.00	4364 6.020	1/4-20 & 1/4-28		**4605 6.412**
12.00	7.000	5.500	DIN / JIS	-	-	16.50	29.00	2.00	26.00	4364 7.020	M7 / M9 / M10		**4605 7.012**
12.00	7.938	5.944	ANSI	0.3125	0.234	16.50	29.00	2.00	31.00	4364 8.020	1/16-27 / 1/8-27		**4605 7.912**
12.00	8.000	6.200	DIN	-	-	16.50	29.00	2.00	31.00	4364 8.020	M8 / M11		**4605 8.012**
12.00	8.000	6.500	JIS	-	-	16.50	29.00	2.00	31.00	4364 8.020	M11		**4605 18.012**
12.00	8.077	6.045	ANSI	0.318	0.238	16.50	29.00	2.00	31.00	4364 8.020	5/16-18 & 5/16-24		**4605 28.012**
12.00	8.204	6.147	ANSI	0.323	0.242	16.50	29.00	2.00	31.00	4364 8.020	7/16-14 & 7/16-20		**4605 8.212**
12.00	8.500	6.500	JIS	-	-	16.50	29.00	2.00	31.00	4364 8.020	M12		**4605 8.512**
12.00	9.000	7.000	DIN	-	-	16.50	29.00	2.00	32.00	4364 9.020	M9 / M12		**4605 9.012**
12.00	9.322	6.985	ANSI	0.367	0.275	16.50	29.00	2.00	32.00	4364 9.020	1/2-13 & 1/2-20		**4605 9.312**
12.00	9.677	7.264	ANSI	0.381	0.286	16.50	29.00	2.00	33.00	4364 9.020	3/8-16 & 3/8-24		**4605 9.612**
12.00	10.000	8.000	DIN	-	-	16.50	29.00	2.00	36.00	4364 10.020	M10		**4605 10.012**

Product information

- for clamping taps with square shank in GÜHROSync synchro tapping chucks
- clamping-Ø for tool shank tolerance h6-h9
- face side closed, therefore coolant leak-proof for threading tools with IC
- positive drive
- position setting screw on tap shank
- length-setting screw allows 3 mm readjustment

Scope of delivery

- order setting screw “face” article no. 4364 separately
- order MQL setting screws article no. 4305 separately

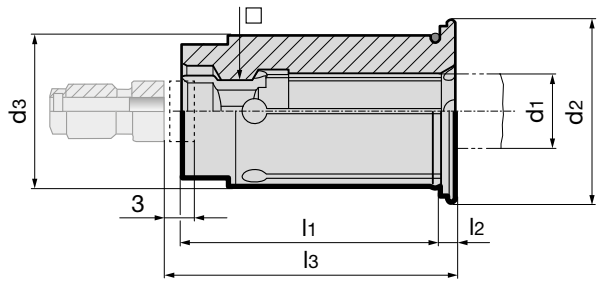

Article no. **4605**

d3 mm	d1 mm	□ mm	Standard	d1 inch	□ inch	d2 mm	l1 mm	l2 mm	l3 mm	for adjustment screw	for thread	Order no.
20.00	6.000	4.500	JIS	-	-	24.10	34.00	2.00	26.00	4364 6.032	M6	**4605 26.020**
20.00	6.000	4.900	DIN	-	-	24.10	34.00	2.00	26.00	4364 6.032	M4.5/M5/M6/M7/M8	**4605 6.020**
20.00	6.200	5.000	JIS	-	-	24.10	34.00	2.00	26.00	4364 6.032	M7 / M8	**4605 6.220**
20.00	6.477	4.851	ANSI	0.255	0.191	24.10	34.00	2.00	26.00	4364 6.032	1/4-20 & 1/4-28	**4605 6.420**
20.00	7.000	5.500	DIN / JIS	-	-	24.10	34.00	2.00	26.00	4364 7.032	M7 / M9 / M10	**4605 7.020**
20.00	7.938	5.944	ANSI	0.3125	0.234	24.10	34.00	2.00	31.00	4364 8.032	1/16-27 / 1/8-27	**4605 7.920**
20.00	8.000	6.200	DIN	-	-	24.10	34.00	2.00	31.00	4364 8.032	M8 / M11	**4605 8.020**
20.00	8.000	6.500	JIS	-	-	24.10	34.00	2.00	31.00	4364 8.032	M11	**4605 18.020**
20.00	8.077	6.045	ANSI	0.318	0.238	24.10	34.00	2.00	31.00	4364 8.032	5/16-18 & 5/16-24	**4605 28.020**
20.00	8.204	6.147	ANSI	0.323	0.242	24.10	34.00	2.00	31.00	4364 8.032	7/16-14 & 7/16-20	**4605 8.220**
20.00	8.500	6.500	JIS	-	-	24.10	34.00	2.00	31.00	4364 8.032	M12	**4605 8.520**
20.00	9.000	7.000	DIN	-	-	24.10	34.00	2.00	32.00	4364 9.032	M9 / M12	**4605 9.020**
20.00	9.322	6.985	ANSI	0.367	0.275	24.10	34.00	2.00	32.00	4364 9.032	1/2-13 & 1/2-20	**4605 9.320**
20.00	9.677	7.264	ANSI	0.381	0.286	24.10	34.00	2.00	33.00	4364 9.032	3/8-16 & 3/8-24	**4605 9.620**
20.00	10.000	8.000	DIN	-	-	24.10	34.00	2.00	36.00	4364 10.032	M10	**4605 10.020**
20.00	10.500	8.000	JIS	-	-	24.10	34.00	2.00	36.00	4364 10.032	M14	**4605 10.520**
20.00	10.897	8.179	ANSI	0.429	0.322	24.10	34.00	2.00	35.00	4364 10.032	9/16-12 & 9/16-18	**4605 10.820**
20.00	11.000	9.000	DIN	-	-	24.10	34.00	2.00	37.00	4364 11.032	M14	**4605 11.020**
20.00	12.000	9.000	DIN	-	-	24.10	34.00	2.00	37.00	4364 11.032	M16	**4605 12.020**
20.00	12.192	9.144	ANSI	0.480	0.360	24.10	34.00	2.00	36.00	4364 11.032	5/8-11 & 5/8-18	**4605 12.120**
20.00	12.500	10.000	JIS	-	-	24.10	34.00	2.00	38.00	4364 11.032	M16	**4605 12.520**
20.00	13.000	10.000	JIS	-	-	24.10	34.00	2.00	38.00	4364 11.032	M17	**4605 13.020**
20.00	14.000	11.000	DIN / JIS	-	-	24.10	34.00	2.00	39.00	4364 14.032	M18	**4605 14.020**
20.00	14.288	10.693	ANSI	0.5625	0.421	24.10	34.00	2.00	38.00	4364 14.032	1/4-18	**4605 14.220**
20.00	14.986	11.227	ANSI	0.590	0.442	24.10	34.00	2.00	39.00	4364 14.032	3/4-10 & 3/4-16	**4605 14.920**
20.00	15.000	12.000	JIS	-	-	24.10	34.00	2.00	40.00	4364 16.032	M20	**4605 15.020**
20.00	16.000	12.000	DIN	-	-	24.10	34.00	2.00	41.00	4364 16.032	M20	**4605 16.020**

Product information

- for clamping taps with square shank in GÜHROSync synchro tapping chucks
- clamping-Ø for tool shank tolerance h6-h9
- positive drive of reduction bush in Gührosync synchro chuck
- with coolant slots for peripheral cooling, therefore process and tool life improvement
- coiled swarf is consistently washed away
- position setting screw on tap shank
- length-setting screw allows 3 mm readjustment

Scope of delivery

- order MQL setting screws article no. 4305 separately
- order setting screw “face” article no. 4364 separately

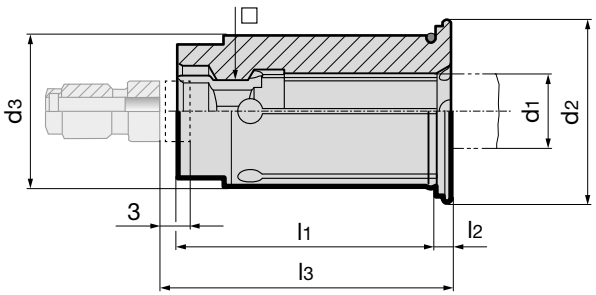

GÜHROJET

Article no. 4606

d_3 mm	d_1 mm	□ mm	Standard	d_1 inch	□ inch	d_2 mm	l_1 mm	l_2 mm	l_3 mm	for adjustment screw	for thread	Order no.
12.00	2.800	2.100	DIN	-	-	16.50	29.00	2.00	-	-	M2/M2.2/M2.5/M4	**4606 2.812**
12.00	3.500	2.700	DIN	-	-	16.50	29.00	2.00	-	-	M3 / M4.5 / M5	**4606 3.512**
12.00	3.581	2.794	ANSI	0.141	0.110	16.50	29.00	2.00	-	-	6-32 & 6-40	**4606 3.612**
12.00	4.000	3.200	JIS	-	-	16.50	29.00	2.00	-	-	M3 / M3.5	**4606 4.012**
12.00	4.267	3.327	ANSI	0.168	0.131	16.50	29.00	2.00	-	-	8-32 & 8-36	**4606 4.312**
12.00	4.500	3.400	DIN	-	-	16.50	29.00	2.00	26.00	4364 5.020	M4 / M6	**4606 4.512**
12.00	4.928	3.861	ANSI	0.194	0.152	16.50	29.00	2.00	26.00	4364 5.020	10-24 & 10-32	**4606 4.912**
12.00	5.000	4.000	JIS	-	-	16.50	29.00	2.00	26.00	4364 5.020	M4 / M4.5 / M5	**4606 5.012**
12.00	5.500	4.500	JIS	-	-	16.50	29.00	2.00	26.00	4364 5.020	M5	**4606 5.512**
12.00	5.588	4.191	ANSI	0.220	0.165	16.50	29.00	2.00	26.00	4364 5.020	12-24 & 12-28	**4606 15.512**
12.00	6.000	4.500	JIS	-	-	16.50	29.00	2.00	26.00	4364 6.020	M6	**4606 16.012**
12.00	6.000	4.900	DIN	-	-	16.50	29.00	2.00	26.00	4364 6.020	M4.5/M5/M6/M7/M8	**4606 6.012**
12.00	6.200	5.000	JIS	-	-	16.50	29.00	2.00	26.00	4364 6.020	M7 / M8	**4606 6.212**
12.00	6.477	4.851	ANSI	0.255	0.191	16.50	29.00	2.00	26.00	4364 6.020	1/4-20 & 1/4-28	**4606 6.412**
12.00	7.000	5.500	DIN / JIS	-	-	16.50	29.00	2.00	26.00	4364 7.020	M7 / M9 / M10	**4606 7.012**
12.00	7.938	5.944	ANSI	0.3125	0.234	16.50	29.00	2.00	31.00	4364 8.020	1/16-27 / 1/8-27	**4606 7.912**
12.00	8.000	6.200	DIN	-	-	16.50	29.00	2.00	31.00	4364 8.020	M8 / M11	**4606 8.012**
12.00	8.000	6.500	JIS	-	-	16.50	29.00	2.00	31.00	4364 8.020	M11	**4606 18.012**
12.00	8.077	6.045	ANSI	0.318	0.238	16.50	29.00	2.00	31.00	4364 8.020	5/16-18 & 5/16-24	**4606 28.012**
12.00	8.204	6.147	ANSI	0.323	0.242	16.50	29.00	2.00	31.00	4364 8.020	7/16-14 & 7/16-20	**4606 8.212**
12.00	8.500	6.500	JIS	-	-	16.50	29.00	2.00	31.00	4364 8.020	M12	**4606 8.512**
12.00	9.000	7.000	DIN	-	-	16.50	29.00	2.00	32.00	4364 9.020	M9 / M12	**4606 9.012**
12.00	9.322	6.985	ANSI	0.367	0.275	16.50	29.00	2.00	32.00	4364 9.020	1/2-13 & 1/2-20	**4606 9.312**
12.00	9.677	7.264	ANSI	0.381	0.286	16.50	29.00	2.00	33.00	4364 9.020	3/8-16 & 3/8-24	**4606 9.612**
12.00	10.000	8.000	DIN	-	-	16.50	29.00	2.00	36.00	4364 10.020	M10	**4606 10.012**

Product information

- for clamping taps with square shank in GÜHROSync synchro tapping chucks
- clamping-Ø for tool shank tolerance h6-h9
- positive drive of reduction bush in Gührosync synchro chuck
- with coolant slots for peripheral cooling, therefore process and tool life improvement
- coiled swarf is consistently washed away
- position setting screw on tap shank
- length-setting screw allows 3 mm readjustment

Scope of delivery

- order MQL setting screws article no. 4305 separately
- order setting screw “face” article no. 4364 separately

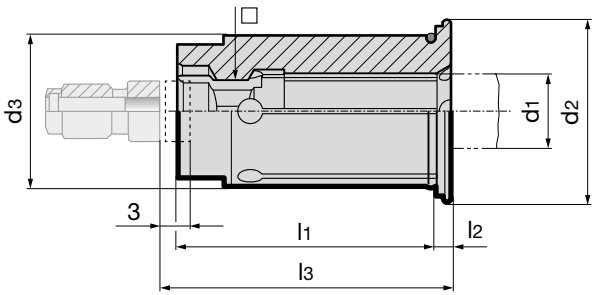

GÜHROJET

Article no. 4606

d_3 mm	d_1 mm	□ mm	Standard	d_1 inch	□ inch	d_2 mm	l_1 mm	l_2 mm	l_3 mm	for adjustment screw	for thread	Order no.
20.00	6.000	4.500	JIS	-	-	24.10	34.00	2.00	26.00	4364 6.032	M6	**4606 26.020**
20.00	6.000	4.900	DIN	-	-	24.10	34.00	2.00	26.00	4364 6.032	M4.5/M5/M6/M7/M8	**4606 6.020**
20.00	6.200	5.000	JIS	-	-	24.10	34.00	2.00	26.00	4364 6.032	M7 / M8	**4606 6.220**
20.00	6.477	4.851	ANSI	0.255	0.191	24.10	34.00	2.00	26.00	4364 6.032	1/4-20 & 1/4-28	**4606 6.420**
20.00	7.000	5.500	DIN / JIS	-	-	24.10	34.00	2.00	26.00	4364 7.032	M7 / M9 / M10	**4606 7.020**
20.00	7.938	5.944	ANSI	0.3125	0.234	24.10	34.00	2.00	31.00	4364 8.032	1/16-27/ 1/8-27	**4606 7.920**
20.00	8.000	6.200	DIN	-	-	24.10	34.00	2.00	31.00	4364 8.032	M8 / M11	**4606 8.020**
20.00	8.000	6.500	JIS	-	-	24.10	34.00	2.00	31.00	4364 8.032	M11	**4606 18.020**
20.00	8.077	6.045	ANSI	0.318	0.238	24.10	34.00	2.00	31.00	4364 8.032	5/16-18 & 5/16-24	**4606 28.020**
20.00	8.204	6.147	ANSI	0.323	0.242	24.10	34.00	2.00	31.00	4364 8.032	7/16-14 & 7/16-20	**4606 8.220**
20.00	8.500	6.500	JIS	-	-	24.10	34.00	2.00	31.00	4364 8.032	M12	**4606 8.520**
20.00	9.000	7.000	DIN	-	-	24.10	34.00	2.00	32.00	4364 9.032	M9 / M12	**4606 9.020**
20.00	9.322	6.985	ANSI	0.367	0.275	24.10	34.00	2.00	32.00	4364 9.032	1/2-13 & 1/2-20	**4606 9.320**
20.00	9.677	7.264	ANSI	0.381	0.286	24.10	34.00	2.00	33.00	4364 9.032	3/8-16 & 3/8-24	**4606 9.620**
20.00	10.000	8.000	DIN	-	-	24.10	34.00	2.00	36.00	4364 10.032	M10	**4606 10.020**
20.00	10.500	8.000	JIS	-	-	24.10	34.00	2.00	36.00	4364 10.032	M14	**4606 10.520**
20.00	10.897	8.179	ANSI	0.429	0.322	24.10	34.00	2.00	35.00	4364 10.032	9/16-12 & 9/16-18	**4606 10.820**
20.00	11.000	9.000	DIN	-	-	24.10	34.00	2.00	37.00	4364 11.032	M14	**4606 11.020**
20.00	12.000	9.000	DIN	-	-	24.10	34.00	2.00	37.00	4364 11.032	M16	**4606 12.020**
20.00	12.192	9.144	ANSI	0.480	0.360	24.10	34.00	2.00	36.00	4364 11.032	5/8-11 & 5/8-18	**4606 12.120**
20.00	12.500	10.000	JIS	-	-	24.10	34.00	2.00	38.00	4364 11.032	M16	**4606 12.520**
20.00	13.000	10.000	JIS	-	-	24.10	34.00	2.00	38.00	4364 11.032	M17	**4606 13.020**
20.00	14.000	11.000	DIN / JIS	-	-	24.10	34.00	2.00	39.00	4364 14.032	M18	**4606 14.020**
20.00	14.288	10.693	ANSI	0.5625	0.421	24.10	34.00	2.00	38.00	4364 14.032	1/4-18	**4606 14.220**
20.00	14.986	11.227	ANSI	0.590	0.442	24.10	34.00	2.00	39.00	4364 14.032	3/4-10 & 3/4-16	**4606 14.920**
20.00	15.000	12.000	JIS	-	-	24.10	34.00	2.00	40.00	4364 16.032	M20	**4606 15.020**
20.00	16.000	12.000	DIN	-	-	24.10	34.00	2.00	41.00	4364 16.032	M20	**4606 16.020**

Product information

- for hydro-synchro tapping chucks article no. 4601, 4576, 4577 and 4525
- for synchro tapping chucks article no. 4326 and 4327
- for conventional internal cooling
- with facing stop for standard shank ends
- position setting screw on tap shank
- length-setting screw allows 3 mm readjustment with hexagonal spanner article no. 4912, type „B“

Scope of delivery

- with O-ring for secure seal

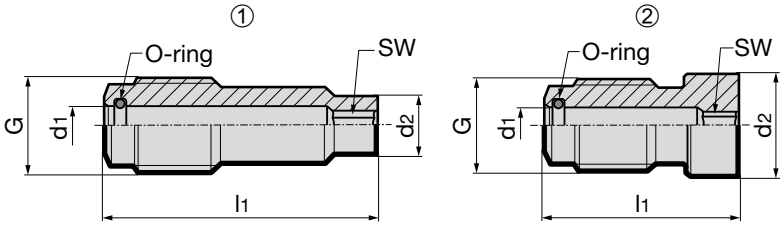

									Article no.	4364
for nominal size	for tap shank-Ø x □	G	d_1 mm	d_2 mm	l_1 mm	SW	O-ring	type		Order no.
ER20 / Hydro12	< Ø6	M8x1	3.6	3.3	23.7	2.0	3.5x1	1		**4364 5.020**
ER20 / Hydro12	6x4,9	M8x1	3.6	4.8	23.7	2.5	3.5x1	1		**4364 6.020**
ER20 / Hydro12	7x5,5	M8x1	3.6	5.4	23.7	2.5	3.5x1	1		**4364 7.020**
ER20 / Hydro12	8x6,2	M8x1	3.6	5.8	18.7	2.5	3.5x1	1		**4364 8.020**
ER20 / Hydro12	9x7	M8x1	3.6	6.9	17.7	2.5	3.5x1	1		**4364 9.020**
ER20 / Hydro12	10x8	M8x1	3.6	7.8	13.7	2.5	3.5x1	2		**4364 10.020**
ER20 / Hydro12	11x9	M8x1	3.6	8.8	14.8	2.5	3.5x1	2		**4364 11.020**
ER32 / Hydro20	< Ø6	M10x1	4.1	3.3	33.0	2.0	4x1	1		**4364 5.032**
ER32 / Hydro20	6x4,9	M10x1	4.1	4.8	34.0	3.0	4x1	1		**4364 6.032**
ER32 / Hydro20	7x5,5	M10x1	4.1	5.4	33.8	3.0	4x1	1		**4364 7.032**
ER32 / Hydro20	8x6,2	M10x1	4.1	6.1	28.8	3.0	4x1	1		**4364 8.032**
ER32 / Hydro20	9x7	M10x1	4.1	6.9	28.3	3.0	4x1	1		**4364 9.032**
ER32 / Hydro20	10x8	M10x1	4.1	7.8	23.8	3.0	4x1	1		**4364 10.032**
ER32 / Hydro20	11x9 & 12x9	M10x1	4.1	8.8	22.9	3.0	4x1	1		**4364 11.032**
ER32 / Hydro20	14x11	M10x1	4.1	10.8	20.7	3.0	4x1	2		**4364 14.032**
ER32 / Hydro20	16x12	M10x1	4.1	11.8	19.7	3.0	4x1	2		**4364 16.032**
ER32 / Hydro20	18x14.5 & 20x16	M10x1	4.1	14.3	18.0	3.0	4x1	2		**4364 18.032**

Synchro tapping chucks with straight shank

Product information
- compensate synchronisation errors
- minimal length compensation ± 0,15 mm in tension and compression direction balances very small pitch differences between synchro spindle and tap, which can cause high frictional forces on the thread flanks
- length-setting screw allows 2 to 3 mm readjustment
- suitable for internal cooling
- max. coolant pressure up to 50 bar
- combination shank similar to DIN 1835 for side lock holders

Scope of delivery
- incl. sealed IC/ER clamping nut article no. 4306 (*see torque)
- incl. adjustment key for adjustment screws

- order adjustment screws „plan“ article no. 4364, tapping collet, article no. 4308, sealing washer, article no. 4335 and clamping key, article no. 4913 separately

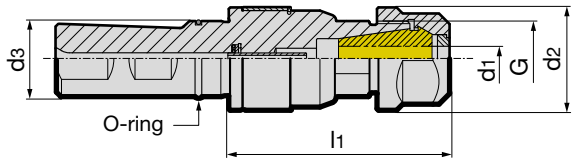

Article no. 4326

d_3 ~DIN 1835 mm	nom. size	for thread	d_1 mm	d_2 mm	l_1 mm	torque* Nm	G	kg	Order no.
25	ER20	M4-M14	4-11.0	34	73	35	M25x1.5	0.50	**4326 20.025**
25	ER32	M4-M30	4-20.0	50	87.5	136	M40x1.5	1.30	**4326 32.025**

HSK-A synchro tapping chucks

Product information
- compensate synchronisation errors
- guarantee high thread quality and optimal tool life with conventional taps
- minimal length compensation ± 0,15 mm in tension and compression direction between synchronous spindle and tap reduces excessive thread flank friction
- reduces a possible increase in axial forces during the cutting cycle to a minimum
- length-setting screw allows 2 to 3 mm readjustment
- suitable for internal cooling
- max. coolant pressure up to 50 bar
- HSK-A to ISO 12164-1/DIN 69893-1

Scope of delivery
- incl. sealed IC/ER clamping nut article no. 4306 (*see torque)
- incl. adjustment key for adjustment screws

- order adjustment screws „plan“ article no. 4364, tapping collet, article no. 4308, sealing washer, article no. 4325 and clamping key, article no. 4913 separately
- for conventional cooling order coolant supply set article no. 4949 separately

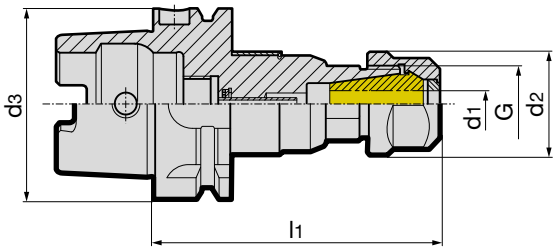

Article no. 4327

HSK-A d_3 mm	nom. size	for thread	d_1 mm	d_2 mm	l_1 mm	torque* Nm	G	kg	Order no.
63	ER20	M4-M14	4.5-11.2	34	95.5	35	M25x1.5	1.00	**4327 20.063**
63	ER20	M4-M14	4.5-11.2	34	160.0	35	M25x1.5	1.50	**4327 20.163**
63	ER32	M4-M30	4.5-18.0	50	109.0	136	M40x1.5	1.70	**4327 32.063**
100	ER20	M4-M14	4.5-11.2	34	102.0	35	M25x1.5	2.50	**4327 20.100**
100	ER32	M4-M30	4.5-18.0	50	115.5	136	M40x1.5	2.70	**4327 32.100**

Product information

- for clamping taps with square shank in synchro tapping chucks or collet holders
- smaller Ø4mm are clamped with collet, article no. 4307 without sq. drive
- tightening torque see clamping nuts article no. 4306

Clamping range:
ER16: Ø 4.5 - Ø 8.0
ER20: Ø 4.0 - Ø 11.0
ER25: Ø 4.5 - Ø 12.0
ER32: Ø 4.0 - Ø 20.0
ER40: Ø 7.0 - Ø 22.0

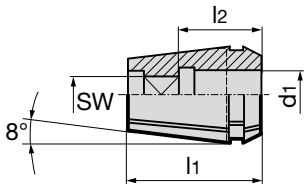

					Article no.	4308
nom. size	for shank Ø d_1 mm	square SW	l_1 mm	l_2 mm		Order no.
ER16	4.5	3.4	27.5	15		**4308 4.516**
ER16	5.5	4.3	27.5	18		**4308 5.516**
ER16	6.0	4.9	27.5	18		**4308 6.016**
ER16	7.0	5.5	27.5	18		**4308 7.016**
ER16	8.0	6.2/6.3	27.5	22		**4308 8.016**
ER20	4.0	3.2	31.5	15		**4308 4.020**
ER20	4.5	3.4	31.5	15		**4308 4.520**
ER20	5.5	4.3	31.5	18		**4308 5.520**
ER20	6.0	4.9	31.5	18		**4308 6.020**
ER20	7.0	5.5	31.5	18		**4308 7.020**
ER20	8.0	6.2/6.3	31.5	22		**4308 8.020**
ER20	9.0	7.0/7.1	31.5	22		**4308 9.020**
ER20	10.0	8.0	31.5	25		**4308 10.020**
ER20	11.0	9.0	31.5	25		**4308 11.020**
ER25	4.5	3.4	34.0	15		**4308 4.525**
ER25	5.5	4.3	34.0	18		**4308 5.525**
ER25	6.0	4.9	34.0	18		**4308 6.025**
ER25	7.0	5.5	34.0	18		**4308 7.025**
ER25	8.0	6.2/6.3	34.0	22		**4308 8.025**
ER25	9.0	7.0/7.1	34.0	22		**4308 9.025**
ER25	10.0	8.0	34.0	25		**4308 10.025**
ER25	11.0	9.0	34.0	25		**4308 11.025**
ER25	12.0	9.0	34.0	25		**4308 12.025**
ER32	4.0	3.15/3.2	40.0	15		**4308 4.032**
ER32	4.5	3.4	40.0	15		**4308 4.532**
ER32	5.5	4.3	40.0	18		**4308 5.532**
ER32	6.0	4.9	40.0	18		**4308 6.032**
ER32	7.0	5.5	40.0	18		**4308 7.032**
ER32	8.0	6.2/6.3	40.0	22		**4308 8.032**
ER32	9.0	7.0/7.1	40.0	22		**4308 9.032**
ER32	10.0	8.0	40.0	25		**4308 10.032**
ER32	11.0	9.0	40.0	25		**4308 11.032**
ER32	12.0	9.0	40.0	25		**4308 12.032**
ER32	14.0	11.0/11.2	40.0	25		**4308 14.032**
ER32	16.0	12.0/12.5	40.0	25		**4308 16.032**
ER32	18.0	14.5	40.0	25		**4308 18.032**
ER32	20.0	16.0	40.0	28		**4308 20.032**
ER40	7.0	5.5	46.0	18		**4308 7.040**
ER40	8.0	6.2/6.3	46.0	22		**4308 8.040**
ER40	9.0	7.0/7.1	46.0	22		**4308 9.040**
ER40	10.0	8.0	46.0	25		**4308 10.040**
ER40	11.0	9.0	46.0	25		**4308 11.040**
ER40	12.0	9.0	46.0	25		**4308 12.040**
ER40	14.0	11.0/11.2	46.0	25		**4308 14.040**
ER40	16.0	12.0/12.5	46.0	25		**4308 16.040**
ER40	18.0	14.5	46.0	25		**4308 18.040**
ER40	20.0	16.0	46.0	28		**4308 20.040**
ER40	22.0	18.0	46.0	28		**4308 22.040**

GÜHROSync tapping chucks + VA taps

The easy way to the perfect thread

GÜHROSync tapping chucks provide excellent chip evacuation and longer tool life thanks to optimal tool clamping in combination with VA taps.

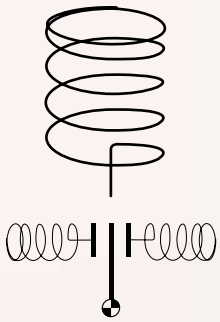

Made visible:
The spring symbol on the GÜHROSync displays the effect of axial and radial force.

GÜHROSync

HSK-A adaptors for tapping chucks

Product information
- for quick change chucks and synchro tapping chucks with straight shank
- HSK-A to ISO 12164-1/DIN 69893-1

Scope of delivery
- incl. clamping screws article no. 4903, order no. 16,001
- order coolant supply set article no. 4949 separately

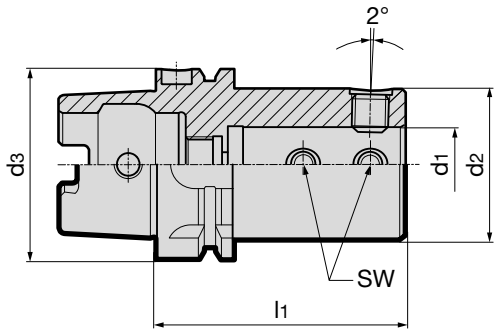

					Article no.	4343
HSK-A d_3	d_1 mm	d_2 mm	l_1 mm	SW	kg	**Order no.**
50	25	50	80	6	0.89	**4343 25.050**
63	25	50	82	6	1.26	**4343 25.063**
80	25	50	87	6	3.10	**4343 25.080**
100	25	50	89	6	4.08	**4343 25.100**

Quick change tapping chucks without internal cooling

Product information
- quick change tapping chucks are provided with a ball guided length compensator that compensates any length difference between spindle feed and pitch of tap thread
- combination shank similar to DIN 1835 for side lock holders

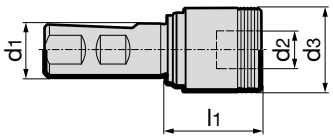

						Article no.	4340
for thread	d_1 mm	d_2 mm	d_3 mm	l_1 mm	tension/ compression ± mm	kg	**Order no.**
M3-M12	25	19	39	45	7.5	0.45	**4340** 19.025
M8-M20	25	31	60	68	10.0	1.10	**4340** 31.025

Quick change tapping chucks with internal cooling

Product information

- quick change tapping chucks are provided with a ball guided length compensator that compensates any length difference between spindle feed and pitch of tap thread
- provided with internal coolant supply feeding the coolant through the chuck and adaptor into the shank of the tap.
  All functional elements are sealed
- max. coolant pressure up to 50 bar
- combination shank similar to DIN 1835 for side lock holders

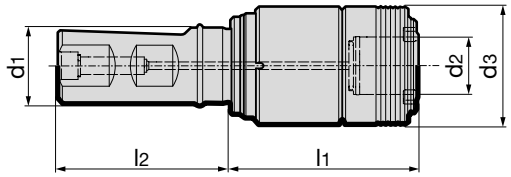

							Article no.	4342
for thread	d_1 mm	d_2 mm	d_3 mm	l_1 mm	l_2 mm	tension/ compression ± mm	kg	**Order no.**
M3-M12	25	19	39	62	57	7.5	0.6	**4342 19.025**
M8-M20	25	31	60	98	57	10.0	1.6	**4342 31.025**

HSK-A quick change tapping chucks with internal cooling

Product information

- quick change tapping chucks are provided with a ball guided length compensator that compensates any length difference between spindle feed and pitch of tap thread
- guarantee high thread quality and optimal tool life with conventional taps
- max. coolant pressure up to 50 bar.
- HSK-A to ISO 12164-1/DIN 69893-1

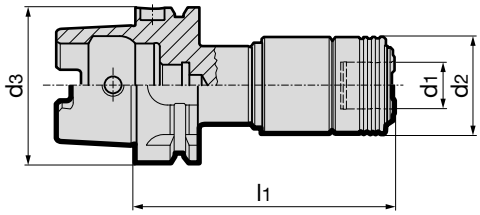

							Article no.	4328
HSK-A d_3 mm	for thread	d_1 mm	d_2 mm	l_1 mm	tension/ compression ± mm	kg		**Order no.**
63	M3-M12	19	39	105	7.5	1.13		**4328 19.063**
63	M8-M20	31	60	140	10.0	2.28		**4328 31.063**

Product information

- with safety clutch
- suitable for HSS taps
- for solid carbide taps a clamping groove is required on the shank to provide additional drive.
- suitable for central coolant supply max. 50 bar.

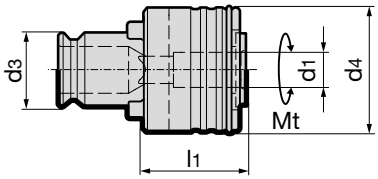

					Article no.	4206
for thread	shank Ø x sq. d_1 mm	d_3 mm	Mt max. Nm	d_4 mm	l_1 mm	Order no.
M3-M12	2.2	19	30	32	25	**4206 19.022**
M3-M12	2.5 x 2.1	19	30	32	25	**4206 19.025**
M3-M12	2.8 x 2.1	19	30	32	25	**4206 19.028**
M3-M12	3.5 x 2.7	19	30	32	25	**4206 19.035**
M3-M12	4 x 3	19	30	32	25	**4206 19.040**
M3-M12	4.5 x 3.4	19	30	32	25	**4206 19.045**
M3-M12	5.5 x 4.5	19	30	32	25	**4206 19.055**
M3-M12	6 x 4.9	19	30	32	25	**4206 19.060**
M3-M12	7 x5.5	19	30	32	25	**4206 19.070**
M3-M12	8 x 6.2	19	30	32	25	**4206 19.080**
M3-M12	9 x 7	19	30	32	25	**4206 19.090**
M3-M12	10 x 8	19	30	32	25	**4206 19.100**
M8-M20	6 x 4.9	31	120	50	34	**4206 31.060**
M8-M20	7 x 5.5	31	120	50	34	**4206 31.070**
M8-M20	8 x 6.2	31	120	50	34	**4206 31.080**
M8-M20	9 x 7	31	120	50	34	**4206 31.090**
M8-M20	10 x 8	31	120	50	34	**4206 31.100**
M8-M20	11 x 9	31	120	50	34	**4206 31.110**
M8-M20	12 x 9	31	120	50	34	**4206 31.120**
M8-M20	14 x 11	31	120	50	34	**4206 31.140**
M8-M20	16 x 12	31	120	50	34	**4206 31.160**

MQL

MQL-TECHNOLOGY

MQL BY GÜHRING

1 MQL BY GÜHRING

Our products for the MQL 1-channel technology are identified by this symbol.

Visual feature of the 1-channel system is the gold coloured MQL length setting screw.

2 MQL BY GÜHRING

Our products for the MQL 2-channel technology are identified by this symbol.

Visual feature of the 2-channel system is the black coloured MQL length setting screw.

MQL SYSTEM FINDER

			HSK-A for automatic tool change	HSK-A for manual tool change
MQL 1 BY GÜHRING	Hydraulic chucks		**4210**, p. 99	**4209**, p. 98
	Shrink fit chucks		**4741**, p. 102	**4735**, p. 100
	Synchro-chucks		**4330**, p. 112	**4298**, p. 112
MQL 2 BY GÜHRING	Hydraulic chucks		**4612**, p. 117	**4611**, p. 115
	Shrink fit chucks		**4614**, p. 123	**4613**, p. 119
	Synchro-chucks		**4341**, p. 137	**4298**, p. 136

automatic tool change

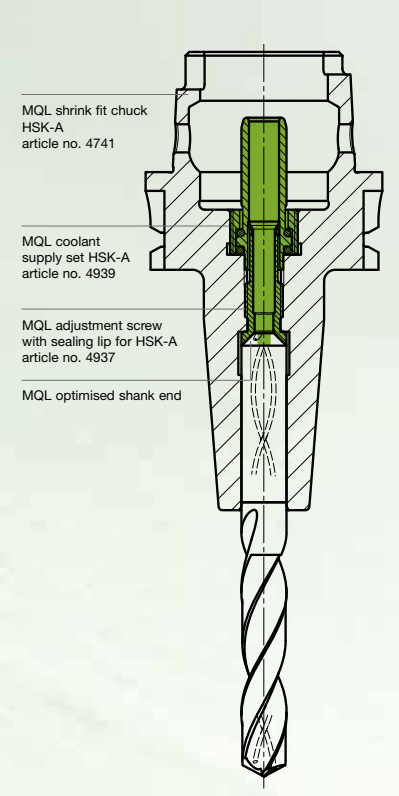

manual tool change

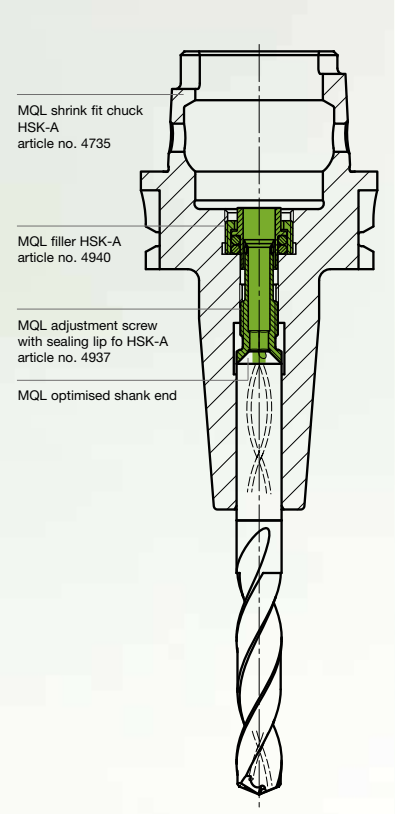

4508 MQL 1 BY GÜHRING
MQL coolant supply set
for single channel
HSK-A

4511 MQL 2 BY GÜHRING
MQL coolant supply set
for 2 channel systems
HSK-A

4513 MQL 1 BY GÜHRING MQL 2 BY GÜHRING
MQL coolant supply set
HSK-A (filler)

MQL shrink fit chucks
HSK-A
auto. tool change

4741 MQL 1 BY GÜHRING
4614 MQL 2 BY GÜHRING

man. tool change

4735 MQL 1 BY GÜHRING
4613 MQL 2 BY GÜHRING

MQL hydraulic tapping chucks
HSK-A
auto. tool change

4210 MQL 1 BY GÜHRING
4612 MQL 2 BY GÜHRING

man. tool change

4209 MQL 1 BY GÜHRING
4611 MQL 2 BY GÜHRING

MQL HSK-A hydraulic
synchro tapping chucks for
single channel
auto. tool change

4602 MQL 1 BY GÜHRING

MQL HSK-A hydraulic
synchro tapping chucks for
2 channel systems
auto. tool change

4603 MQL 2 BY GÜHRING

MQL HSK-A hydraulic
synchro tapping chucks
man. tool change

4604 MQL 1 BY GÜHRING MQL 2 BY GÜHRING

4524 MQL 1 BY GÜHRING MQL 2 BY GÜHRING
MQL Hydro-Ø 12 / Ø 20
synchro tapping chucks with internal cooling Ø 20

4305
MQL setting screws with internal cone
for MQL synchro tapping chucks

4605
Reduction bushes, sealed

4606
GÜHROJET reduction bushes

Threading tool with MQL shank:
shank diameter x square

4508 1 MQL BY GÜHRING

Coolant supply set
for automatic tool change

4511 2 MQL BY GÜHRING

MQL coolant supply set
for automatic tool change

4513 1 MQL BY GÜHRING 2 MQL BY GÜHRING

MQL coolant supply set
for manual tool change

4330

HSK-A synchro tapping chucks for MQL single channel systems for automatic tool change

4341

HSK-A synchro tapping chucks for MQL double channel systems for automatic tool change

4298

HSK-A synchro tapping chucks for manual tool change for MQL single and double channel systems

4305

MQL setting screw with internal taper for MQL synchro tapping chucks

4308

tap collet

4335

sealing washer
for retaining nuts

tap

MQL
TECHNOLOGY AND ADVANTAGES

- Cost reduction due to reduced cleaning
- Environment & health protection
- Less cooling lubrication requirement – high coolant effect
- Low process temperatures
- Lower working temperature at tool point
- Uninterrupted cooling lubricant supply
- Direct response without losses
- High compatibility

MQL

BY GÜHRING

1 MQL BY GÜHRING

Our products for the MQL 1-channel technology are identified by this symbol.

Visual feature of the 1-channel system is the gold coloured MQL length setting screw.

Product information
- to Gühring MQL standard
- for 1-channel-systems
- balancing quality: G6.3 / 15,000 rev./min
- for tool shank tolerance h6
- axial length setting

Scope of delivery
- incl. MQL adjustment screw with sealing lip article no. 4937 and MQL coolant supply set article no. 4940 (filler)
- incl. hexagon chuck key article no. 4912
- special dimensions on request

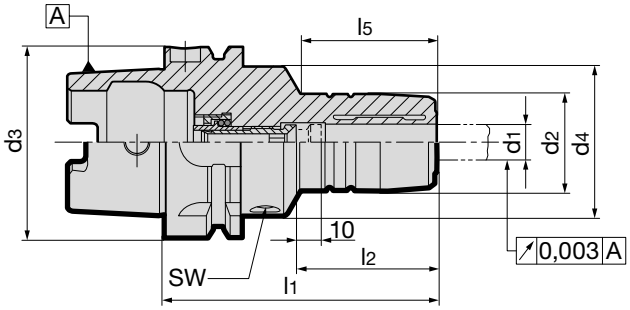

1 MQL BY GÜHRING

Article no. 4209

HSK-A d_3	for shank Ø $d_{1\ h6}$ mm	d_2 mm	d_4 mm	l_1 mm	l_2 mm	l_5 mm	incl. setting screw no. 4937 …	SW	kg	Order no.
32	6	26	40	80	36	29	6.032	4	0.40	**4209 6.032**
32	8	28	40	80	36	29	8.032	4	0.42	**4209 8.032**
32	10	30	40	85	40	35	10.032	4	0.45	**4209 10.032**
32	12	32	40	90	45	40	12.032	4	0.49	**4209 12.032**
40	6	26	33.5	80	36	46	6.040	4	0.44	**4209 6.040**
40	8	28	33.5	80	36	46	8.040	4	0.47	**4209 8.040**
40	10	30	33.5	80	40	46	10.040	4	0.49	**4209 10.040**
40	12	32	33.5	90	45	56	12.040	4	0.46	**4209 12.040**
50	6	26	40	80	36	38.0	6.050	4	0.95	**4209 6.050**
50	8	28	40	80	36	38.0	8.050	4	0.95	**4209 8.050**
50	10	30	40	85	40	44.0	10.050	4	0.95	**4209 10.050**
50	12	32	40	90	45	49.0	12.050	4	0.95	**4209 12.050**
50	14	34	40	90	45	49.0	14.050	4	0.95	**4209 14.050**
50	16	38	53	95	48	36.0	16.050	5	1.25	**4209 16.050**
50	18	40	57	95	48	36.0	18.050	5	1.25	**4209 18.050**
50	20	42	60	100	50	39.0	20.050	5	1.25	**4209 20.050**
63	6	26	50	80	36	34.5	6.100	5	1.25	**4209 6.063**
63	8	28	50	80	36	35.5	8.100	5	1.25	**4209 8.063**
63	10	30	50	85	40	39.0	10.100	5	1.25	**4209 10.063**
63	12	32	50	90	45	45.0	12.100	5	1.35	**4209 12.063**
63	14	34	50	90	45	46.0	14.100	5	1.35	**4209 14.063**
63	16	38	50	95	48	51.0	16.100	5	1.45	**4209 16.063**
63	18	40	50	95	48	52.0	18.100	5	1.45	**4209 18.063**
63	20	42	50	100	50	58.0	20.100	5	1.45	**4209 20.063**
63	25	57	63	115	56	50.0	25.100	6	2.45	**4209 25.063**
63	32	64	75	120	60	58.0	32.100	6	3.10	**4209 32.063**
80	6	26	50	85	36	39	6.100	5	1.50	**4209 6.080**
80	8	28	50	85	36	39	8.100	5	1.52	**4209 8.080**
80	10	30	50	90	40	45	10.100	5	1.56	**4209 10.080**
80	12	32	50	95	45	50	12.100	5	1.61	**4209 12.080**
80	14	34	50	95	45	50	14.100	5	1.64	**4209 14.080**
80	16	38	50	100	48	56	16.100	5	1.72	**4209 16.080**
80	18	40	50	100	48	56	18.100	5	1.76	**4209 18.080**
80	20	42	50	105	50	62	20.100	5	1.82	**4209 20.080**
80	25	57	63	115	56	70	25.100	6	2.60	**4209 25.080**
80	32	64	75	120	60	58	32.100	6	3.11	**4209 32.080**
100	6	26	50	85	36	36.0	6.100	5	2.60	**4209 6.100**
100	8	28	50	85	36	36.0	8.100	5	2.60	**4209 8.100**
100	10	30	50	90	40	42.0	10.100	5	2.60	**4209 10.100**
100	12	32	50	95	45	47.0	12.100	5	2.65	**4209 12.100**
100	14	34	50	95	45	47.0	14.100	5	2.65	**4209 14.100**
100	16	38	50	100	48	53.0	16.100	5	2.85	**4209 16.100**
100	18	40	50	100	48	53.0	18.100	5	2.85	**4209 18.100**
100	20	42	50	105	50	59.0	20.100	5	3.35	**4209 20.100**
100	25	57	63	115	56	67.0	25.100	6	3.50	**4209 25.100**
100	32	64	75	120	60	72.0	32.100	6	3.95	**4209 32.100**

Product information
- to Gühring MQL standard
- for 1-channel-systems
- balancing quality: G6.3 / 15,000 rev./min
- for tool shank tolerance h6
- axial length setting

Scope of delivery
- incl. MQL adjustment screw with sealing lip article no. 4937 and MQL coolant supply set article no. 4939
- incl. hexagon chuck key article no. 4912
- special dimensions on request

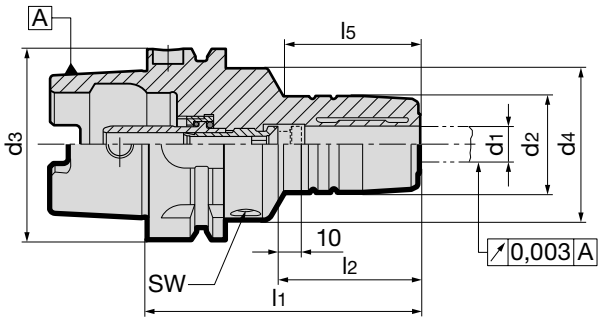

1 MQL BY GÜHRING

Article no. 4210

HSK-A d_3	for shank Ø $d_{1\ h6}$ mm	d_2 mm	d_4 mm	l_1 mm	l_2 mm	l_5 mm	incl. setting screw no. 4937 …	SW	kg	Order no.
32	6	26	40	80	36	29	6.032	4	0.40	**4210 6.032**
32	8	28	40	80	36	29	8.032	4	0.42	**4210 8.032**
32	10	30	40	85	40	35	10.032	4	0.45	**4210 10.032**
32	12	32	40	90	45	40	12.032	4	0.49	**4210 12.032**
40	6	26	33.5	80	36	46	6.040	4	0.44	**4210 6.040**
40	8	28	33.5	80	36	46	8.040	4	0.47	**4210 8.040**
40	10	30	33.5	80	40	46	10.040	4	0.49	**4210 10.040**
40	12	32	33.5	90	45	56	12.040	4	0.56	**4210 12.040**
50	6	26	40	80	36	38.0	6.050	4	0.95	**4210 6.050**
50	8	28	40	80	36	38.0	8.050	4	0.95	**4210 8.050**
50	10	30	40	85	40	44.0	10.050	4	0.95	**4210 10.050**
50	12	32	40	90	45	49.0	12.050	4	0.95	**4210 12.050**
50	14	34	40	90	45	49.0	14.050	4	0.95	**4210 14.050**
50	16	38	53	95	48	36.0	16.050	5	1.25	**4210 16.050**
50	18	40	57	95	48	36.0	18.050	5	1.25	**4210 18.050**
50	20	42	60	100	50	39.0	20.050	5	1.25	**4210 20.050**
63	6	26	50	80	36	34.5	6.100	5	1.25	**4210 6.063**
63	8	28	50	80	36	35.5	8.100	5	1.25	**4210 8.063**
63	10	30	50	85	40	39.0	10.100	5	1.25	**4210 10.063**
63	12	32	50	90	45	45.0	12.100	5	1.35	**4210 12.063**
63	14	34	50	90	45	46.0	14.100	5	1.35	**4210 14.063**
63	16	38	50	95	48	51.0	16.100	5	1.45	**4210 16.063**
63	18	40	50	95	48	52.0	18.100	5	1.45	**4210 18.063**
63	20	42	50	100	50	58.0	20.100	5	1.45	**4210 20.063**
63	25	57	63	115	56	50.0	25.100	6	2.45	**4210 25.063**
63	32	64	75	120	60	58.0	32.100	6	3.10	**4210 32.063**
80	6	26	50	85	36	39	6.100	5	1.50	**4210 6.080**
80	8	28	50	85	36	39	8.100	5	1.52	**4210 8.080**
80	10	30	50	90	40	45	10.100	5	1.56	**4210 10.080**
80	12	32	50	95	45	50	12.100	5	1.61	**4210 12.080**
80	14	34	50	95	45	50	14.100	5	1.64	**4210 14.080**
80	16	38	50	100	48	56	16.100	5	1.72	**4210 16.080**
80	18	40	50	100	48	56	18.100	5	1.76	**4210 18.080**
80	20	42	50	105	50	62	20.100	5	1.82	**4210 20.080**
80	25	57	63	115	56	70	25.100	6	2.60	**4210 25.080**
80	32	64	75	120	60	58	32.100	6	3.11	**4210 32.080**
100	6	26	50	85	36	36.0	6.100	5	2.60	**4210 6.100**
100	8	28	50	85	36	36.0	8.100	5	2.60	**4210 8.100**
100	10	30	50	90	40	42.0	10.100	5	2.60	**4210 10.100**
100	12	32	50	95	45	47.0	12.100	5	2.65	**4210 12.100**
100	14	34	50	95	45	47.0	14.100	5	2.65	**4210 14.100**
100	16	38	50	100	48	53.0	16.100	5	2.85	**4210 16.100**
100	18	40	50	100	48	53.0	18.100	5	2.85	**4210 18.100**
100	20	42	50	105	50	59.0	20.100	5	3.35	**4210 20.100**
100	25	57	63	115	56	67.0	25.100	6	3.50	**4210 25.100**
100	32	64	75	120	60	72.0	32.100	6	3.95	**4210 32.100**

Product information

- to Gühring MQL standard
- for 1-channel-systems
- balancing quality: G6.3 / 15,000 rev./min
- incl. balancing thread 4xM6/6xM6
- for tool shank tolerance h6
- also available in the lengths
  l1 = 120 mm (concentricity 4 µm)
  and 160 mm (concentricity 5 µm)

Scope of delivery

- incl. MQL adjustment screw with sealing lip article no. 4937 and MQL coolant supply set article no. 4940

- special dimensions on request

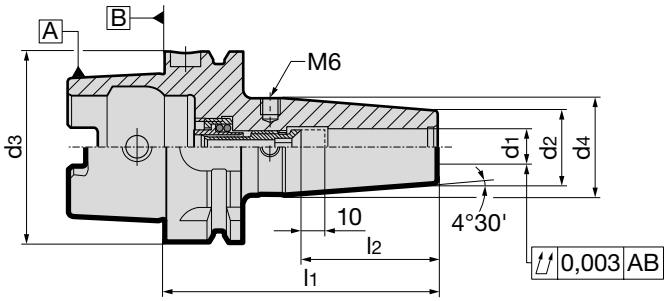

MQL 1-channel

								Article no.	4735
HSK-A d_3	for shank Ø $d_{1\ h6}$ mm	d_2 mm	d_4 mm	l_1 mm	l_2 mm	incl. setting screw no. 4937 …	kg		Order no.
32	6	21	25.5	80	36	6.032	0.30		**4735 6.032**
32	8	21	25.5	80	36	8.032	0.30		**4735 8.032**
32	10	24	31.7	85	40	10.032	0.30		**4735 10.032**
32	12	24	32.3	90	45	12.032	0.30		**4735 12.032**
40	6	21	27	80	36	6.040	0.40		**4735 6.040**
40	8	21	27	80	36	8.040	0.40		**4735 8.040**
40	10	24	32	80	40	10.040	0.50		**4735 10.040**
40	12	24	32	90	45	12.040	0.50		**4735 12.040**
40	14	27	33.5	90	45	14.040	0.60		**4735 14.040**
40	16	27	33.5	90	48	16.040	0.50		**4735 16.040**
50	6	21	27	80	36	6.050	0.60		**4735 6.050**
50	8	21	27	80	36	8.050	0.60		**4735 8.050**
50	10	24	32	85	40	10.050	0.70		**4735 10.050**
50	12	24	32	90	45	12.050	0.70		**4735 12.050**
50	14	27	34	90	45	14.050	0.70		**4735 14.050**
50	16	27	34	95	48	16.050	0.70		**4735 16.050**
50	18	33	41.5	95	48	18.050	0.90		**4735 18.050**
50	20	33	41.5	100	50	20.050	0.90		**4735 20.050**
63	6	21	27	80	36	6.100	0.70		**4735 6.063**
63	8	21	27	80	36	8.100	0.70		**4735 8.063**
63	10	24	32	85	40	10.100	0.70		**4735 10.063**
63	12	24	32	90	45	12.100	0.80		**4735 12.063**
63	14	27	34	90	45	14.100	0.80		**4735 14.063**
63	16	27	34	95	48	16.100	0.90		**4735 16.063**
63	18	33	42	95	48	18.100	0.90		**4735 18.063**
63	20	33	42	100	50	20.100	1.00		**4735 20.063**
63	25	44	52.5	115	56	25.100	1.00		**4735 25.063**
63	32	44	52.5	120	60	32.100	1.10		**4735 32.063**
63	6	21	27	120	36	6.032	0.90		**4735 806.063**
63	8	21	27	120	36	8.040	1.00		**4735 808.063**
63	10	24	32	120	40	10.050	1.10		**4735 810.063**
63	12	24	32	120	45	12.100	1.20		**4735 212.063**
63	14	27	34	120	45	14.100	1.40		**4735 214.063**
63	16	27	34	120	48	16.100	1.40		**4735 216.063**
63	18	33	42	120	48	18.100	1.60		**4735 218.063**
63	20	33	42	120	50	20.100	1.60		**4735 220.063**
63	6	21	27	160	36	6.032	0.80		**4735 906.063**
63	8	21	27	160	36	8.040	0.80		**4735 908.063**
63	10	24	32	160	40	10.050	0.90		**4735 910.063**
63	12	24	32	160	45	12.100	0.90		**4735 112.063**
63	14	27	34	160	45	14.100	1.00		**4735 114.063**

								Article no.	4735
HSK-A d_3	for shank Ø $d_{1\ h6}$ mm	d_2 mm	d_4 mm	l_1 mm	l_2 mm	incl. setting screw no. 4937 …	kg		Order no.
63	16	27	34	160	48	16.100	1.00		**4735 116.063**
63	18	33	42	160	48	18.100	1.20		**4735 118.063**
63	20	33	42	160	50	20.100	1.20		**4735 120.063**
63	25	44	52.5	160	56	25.100	1.80		**4735 125.063**
63	32	44	52.5	160	60	32.100	1.70		**4735 132.063**
80	6	21	27	85	36	6.100	1.30		**4735 6.080**
80	8	21	27	85	36	8.100	1.30		**4735 8.080**
80	10	24	32	90	40	10.100	1.40		**4735 10.080**
80	12	24	32	95	45	12.100	1.40		**4735 12.080**
80	14	27	34	95	45	14.100	1.50		**4735 14.080**
80	16	27	34	100	48	16.100	1.50		**4735 16.080**
80	18	33	42	100	48	18.100	1.70		**4735 18.080**
80	20	33	42	105	50	20.100	1.70		**4735 20.080**
80	25	44	53	115	56	25.100	2.20		**4735 25.080**
80	32	44	53	120	60	32.100	2.10		**4735 32.080**
100	6	21	27	85	36	6.100	2.10		**4735 6.100**
100	8	21	27	85	36	8.100	2.20		**4735 8.100**
100	10	24	32	90	40	10.100	2.30		**4735 10.100**
100	12	24	32	95	45	12.100	2.30		**4735 12.100**
100	14	27	34	95	45	14.100	2.30		**4735 14.100**
100	16	27	34	100	48	16.100	2.30		**4735 16.100**
100	18	33	42	100	48	18.100	2.50		**4735 18.100**
100	20	33	42	105	50	20.100	2.50		**4735 20.100**
100	25	44	53	115	56	25.100	3.00		**4735 25.100**
100	32	44	53	120	60	32.100	3.00		**4735 32.100**
100	6	21	27	160	36	6.032	2.60		**4735 106.100**
100	8	21	27	160	36	8.040	2.50		**4735 108.100**
100	10	24	32	160	40	10.050	2.70		**4735 110.100**
100	12	24	32	160	45	12.100	2.70		**4735 112.100**
100	14	27	34	160	45	14.100	2.80		**4735 114.100**
100	16	27	34	160	48	16.100	2.80		**4735 116.100**
100	18	33	42	160	48	18.100	3.20		**4735 118.100**
100	20	33	42	160	50	20.100	3.10		**4735 120.100**
100	25	44	53	160	56	25.100	3.90		**4735 125.100**
100	32	44	53	160	60	32.100	3.70		**4735 132.100**

Product information

- to Gühring MQL standard
- for 1-channel-systems
- balancing quality: G6.3 / 15,000 rev./min
- incl. balancing thread 4xM6/6xM6
- for tool shank tolerance h6
- max. deviation f. concentricity 3 µm
- also available in the lengths
  l1 = 120 mm (concentricity 4 µm)
  and 160 mm (concentricity 5 µm)

Scope of delivery

- incl. MQL adjustment screw with sealing lip article no. 4937 and MQL coolant supply set article no. 4939

- special dimensions on request

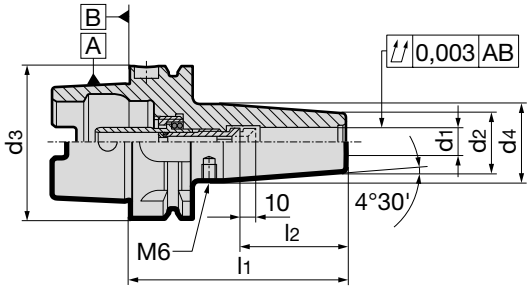

Article no. 4741

HSK-A d_3	for shank Ø $d_{1\ h6}$ mm	d_2 mm	d_4 mm	l_1 mm	l_2 mm	incl. setting screw no. 4937 …	kg	Order no.
32	6	21	25.5	80	36	6.032	0.30	**4741 6.032**
32	8	21	25.5	80	36	8.032	0.30	**4741 8.032**
32	10	24	31.7	85	40	10.032	0.30	**4741 10.032**
32	12	24	32.3	90	45	12.032	0.30	**4741 12.032**
40	6	21	27	80	36	6.040	0.40	**4741 6.040**
40	8	21	27	80	36	8.040	0.40	**4741 8.040**
40	10	24	32	80	40	10.040	0.50	**4741 10.040**
40	12	24	32	90	45	12.040	0.50	**4741 12.040**
40	14	27	33.5	90	45	14.040	0.60	**4741 14.040**
40	16	27	33.5	90	48	16.040	0.50	**4741 16.040**
50	6	21	27	80	36	6.050	0.60	**4741 6.050**
50	8	21	27	80	36	8.050	0.60	**4741 8.050**
50	10	24	32	85	40	10.050	0.70	**4741 10.050**
50	12	24	32	90	45	12.050	0.70	**4741 12.050**
50	14	27	34	90	45	14.050	0.70	**4741 14.050**
50	16	27	34	95	48	16.050	0.70	**4741 16.050**
50	18	33	41.5	95	48	18.050	0.90	**4741 18.050**
50	20	33	41.5	100	50	20.050	0.90	**4741 20.050**
63	6	21	27	80	36	6.100	0.70	**4741 6.063**
63	8	21	27	80	36	8.100	0.70	**4741 8.063**
63	10	24	32	85	40	10.100	0.70	**4741 10.063**
63	12	24	32	90	45	12.100	0.80	**4741 12.063**
63	14	27	34	90	45	14.100	0.80	**4741 14.063**
63	16	27	34	95	48	16.100	0.90	**4741 16.063**
63	18	33	42	95	48	18.100	0.90	**4741 18.063**
63	20	33	42	100	50	20.100	1.00	**4741 20.063**
63	25	44	52.5	115	56	25.100	1.00	**4741 25.063**
63	32	44	52.5	120	60	32.100	1.10	**4741 32.063**
63	6	21	27	120	36	6.032	0.90	**4741 806.063**
63	8	21	27	120	36	8.040	1.00	**4741 808.063**
63	10	24	32	120	40	10.050	1.10	**4741 810.063**
63	12	24	32	120	45	12.100	1.20	**4741 212.063**
63	14	27	34	120	45	14.100	1.40	**4741 214.063**
63	16	27	34	120	48	16.100	1.40	**4741 216.063**
63	18	33	42	120	48	18.100	1.60	**4741 218.063**
63	20	33	42	120	50	20.100	1.60	**4741 220.063**
63	6	21	27	160	36	6.032	0.80	**4741 906.063**
63	8	21	27	160	36	8.040	0.80	**4741 908.063**
63	10	24	32	160	40	10.050	0.90	**4741 910.063**
63	12	24	32	160	45	12.100	0.90	**4741 112.063**

							Article no.	4741
HSK-A d_3	for shank Ø $d_{1\ h6}$ mm	d_2 mm	d_4 mm	l_1 mm	l_2 mm	incl. setting screw no. 4937 …	kg	**Order no.**
63	14	27	34	160	45	14.100	1.00	**4741 114.063**
63	16	27	34	160	48	16.100	1.00	**4741 116.063**
63	18	33	42	160	48	18.100	1.20	**4741 118.063**
63	20	33	42	160	50	20.100	1.20	**4741 120.063**
63	25	44	52.5	160	56	25.100	1.80	**4741 125.063**
63	32	44	52.5	160	60	32.100	1.70	**4741 132.063**
80	6	21	27	85	36	6.100	1.30	**4741 6.080**
80	8	21	27	85	36	8.100	1.30	**4741 8.080**
80	10	24	32	90	40	10.100	1.40	**4741 10.080**
80	12	24	32	95	45	12.100	1.40	**4741 12.080**
80	14	27	34	95	45	14.100	1.50	**4741 14.080**
80	16	27	34	100	48	16.100	1.50	**4741 16.080**
80	18	33	42	100	48	18.100	1.70	**4741 18.080**
80	20	33	42	105	50	20.100	1.70	**4741 20.080**
80	25	44	53	115	56	25.100	2.20	**4741 25.080**
80	32	44	53	120	60	32.100	2.10	**4741 32.080**
100	6	21	27	85	36	6.100	2.10	**4741 6.100**
100	8	21	27	85	36	8.100	2.20	**4741 8.100**
100	10	24	32	90	40	10.100	2.30	**4741 10.100**
100	12	24	32	95	45	12.100	2.30	**4741 12.100**
100	14	27	34	95	45	14.100	2.30	**4741 14.100**
100	16	27	34	100	48	16.100	2.30	**4741 16.100**
100	18	33	42	100	48	18.100	2.50	**4741 18.100**
100	20	33	42	105	50	20.100	2.50	**4741 20.100**
100	25	44	53	115	56	25.100	3.00	**4741 25.100**
100	32	44	53	120	60	32.100	3.00	**4741 32.100**
100	6	21	27	160	36	6.032	2.60	**4741 106.100**
100	8	21	27	160	36	8.040	2.50	**4741 108.100**
100	10	24	32	160	40	10.050	2.70	**4741 110.100**
100	12	24	32	160	45	12.100	2.70	**4741 112.100**
100	14	27	34	160	45	14.100	2.80	**4741 114.100**
100	16	27	34	160	48	16.100	2.80	**4741 116.100**
100	18	33	42	160	48	18.100	3.20	**4741 118.100**
100	20	33	42	160	50	20.100	3.10	**4741 120.100**
100	25	44	53	160	56	25.100	3.90	**4741 125.100**
100	32	44	53	160	60	32.100	3.70	**4741 132.100**

Product information

- to Gühring MQL standard
- for 1-channel-systems
- for the use of tool shanks to Gühring MQL standard
- gold colour, corrosion protective coating to visually identify the 1-channel system
- the patented face orientated o-ring provides axial force clamping which eliminates concentricity errors
- axial damping from Ø 14 to Ø 32

Scope of delivery

- incl. sealing lip

- MQL key tool for the assembly article no. 4050 to be ordered separately

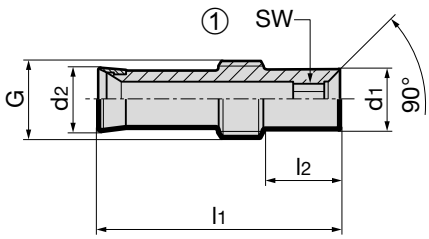

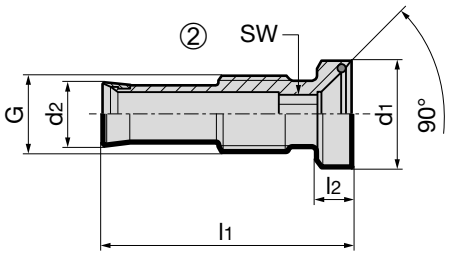

								Article no.	4937
HSK-A	for shank Ø $d_{1\ h6}$ mm	for d_2 mm	l_1 mm	l_2 mm	G	SW	type		Order no.
32	6	4.0	34.5	2.5	M5x0.8	2	2		**4937 6.032**
32	8	4.0	34.5	3.0	M7x1	2	2		**4937 8.032**
32	10	4.0	35.5	3.5	M8x1	2	2		**4937 10.032**
32	12	4.0	35.5	3.5	M10x1	2	2		**4937 12.032**
40	6	5.4	34.1	11.0	M7x1	3	1		**4937 6.040**
40	8	5.4	34.1	3.0	M7x1	3	2		**4937 8.040**
40	10	5.4	30.1	3.5	M8x1	3	2		**4937 10.040**
40	12	5.4	35.1	3.5	M10x1	3	2		**4937 12.040**
40	14	5.4	35.1	4.5	M10x1	3	2		**4937 14.040**
40	16	5.4	32.1	5.5	M12x1	3	2		**4937 16.040**
50	6	6.5	31.8	10.0	M8x1	4	1		**4937 6.050**
50	8	6.5	31.8	3.0	M8x1	4	2		**4937 8.050**
50	10	6.5	32.8	3.5	M8x1	4	2		**4937 10.050**
50	12	6.5	32.8	3.5	M10x1	4	2		**4937 12.050**
50	14	6.5	32.8	4.5	M10x1	4	2		**4937 14.050**
50	16	6.5	34.8	5.5	M12x1	4	2		**4937 16.050**
50	18	6.5	34.8	6.5	M12x1	4	2		**4937 18.050**
50	20	6.5	37.8	6.5	M16x1	4	2		**4937 20.050**
63/80/100	6	8.0	31.0	10.0	M10x1	4	1		**4937 6.100**
63/80/100	8	8.0	31.8	10.0	M10x1	4	1		**4937 8.100**
63/80/100	10	8.0	32.8	3.5	M10x1	4	2		**4937 10.100**
63/80/100	12	8.0	32.8	3.5	M10x1	5	2		**4937 12.100**
63/80/100	14	8.0	32.8	4.5	M10x1	5	2		**4937 14.100**
63/80/100	16	8.0	34.8	5.5	M12x1	5	2		**4937 16.100**
63/80/100	18	8.0	34.8	6.5	M12x1	5	2		**4937 18.100**
63/80/100	20	8.0	37.8	6.5	M16x1	5	2		**4937 20.100**
63/80/100	25	8.0	43.8	10.0	M16x1	5	2		**4937 25.100**
63/80/100	32	8.0	44.8	14.0	M16x1	5	2		**4937 32.100**

Sealing lips for MQL 1-channel length setting screws

Product information
- sealing lips for MQL 1-channel length setting screws article no. 4937
- article no. 4917 1,140 for module adaptor article no. 4716

Scope of delivery
- packaging unit: 5 pieces

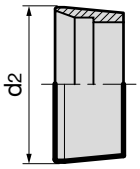

			Article no. 4617
HSK-A	Modul	for d_2 mm	Order no.
32	-	4,0	**4617 1.032**
40	-	5,4	**4617 1.040**
50	-	6,5	**4617 1.050**
63 / 80 / 100	-	8,0	**4617 1.100**
-	60 / 70 / 80 / 80 / 100 / 117 / 140	10,5	**4617 1.140**

MQL-Key 3000

Product information
- special tool set for the secure assembly of MQL tapered screws for 1- and 2-channel systems
- simplifies the handling when assembling the MQL length setting screws
- prevents damage to the MQL sealing elements
- i.e. to be applied for: MQL 1-channel length setting screws article no. 4937 or MQL 2-channel length setting screws article no. 4621

Scope of delivery
- complete set in case or additional set

	Article no. 4050
	Order no.
Case, complete 1-channel basic set	**4050 1.000**
2-channel retrofitting set	**4050 2.000**

MQL 1-channel coolant supply set HSK-A (filler)

Product information

- for MQL tool holders (hydraulic chucks and shrink fit chucks) to company standard
- for 1-channel-systems
- for tool holders with manual tool change
- optimal seal for MQL clamping set

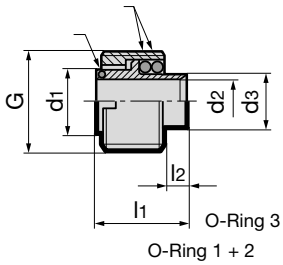

Article no. 4940

for HSK-A	d_1 mm	d_2 mm	d_3 mm	l_1 mm	l_2 mm	G	O-ring 1 & 2 Viton 75	O-ring 3 Viton 80	Order no.
32	5.8	4.0	4.8	18.7	12.5	M10x1.0	5.0x1.2	–	**4940 10.032**
40	7.6	5.4	6.8	13.8	5.5	M12x1.0	7.5x1.5	6.0x0.5	**4940 12.040**
50	9.6	6.5	7.8	15.8	5.5	M16x1.0	9.0x2.0	7.0x1.0	**4940 16.050**
63	11.6	8.0	9.7	16.3	4.0	M18x1.0	10.0x2.5	9.0x1.0	**4940 18.063**
80	13.6	8.0	9.7	18.4	4.0	M20x1.5	13.0x2.0	10.0x1.0	**4940 20.080**
100	15.6	8.0	11.7	18.4	2.0	M24x1.5	14.0x3.0	12.0x1.0	**4940 24.100**

MQL 1-channel coolant supply set HSK-A

Product information

- for MQL tool holders (hydraulic chucks and shrink fit chucks) to company standard
- for 1-channel-systems
- for tool holders with automatic tool change

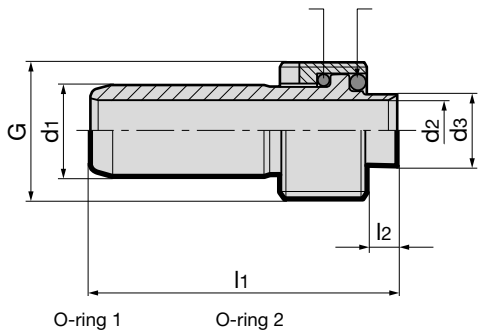

Article no. 4939

for HSK-A	d_1 mm	d_2 mm	d_3 mm	l_1 mm	l_2 mm	G	O-ring 1 Viton 75	O-ring 2 Viton 75	Order no.
32	6	4.0	4.8	38.5	12.5	M10x1.0	5.0x1.2	5.0x1.2	**4939 10.032**
40	8	5.4	6.5	35.0	5.5	M12x1.0	7.5x1.5	7.5x1.5	**4939 12.040**
50	10	6.5	7.5	38.5	5.5	M16x1.0	9.0x2.0	9.0x2.0	**4939 16.050**
63	12	8.0	9.5	40.5	4.0	M18x1.0	10.0x2.5	10.0x2.0	**4939 18.063**
80	14	8.0	9.7	44.0	4.0	M20x1.5	13.0x2.0	13.0x2.0	**4939 20.080**
100	16	8.0	11.5	46.0	2.0	M24x1.5	14.0x3.0	14.0x3.0	**4939 24.100**

Mounting adaptor for MQL HSK-A coolant supply set (filler)

Product information

- adaptor for socket spanner, article no. 4911
- for mounting MQL HSK-A coolant supply set (filler), article no. 4940, for manual tool change

Scope of delivery

- incl. operating manual
- socket spanner, article no. 4911 to be ordered separately

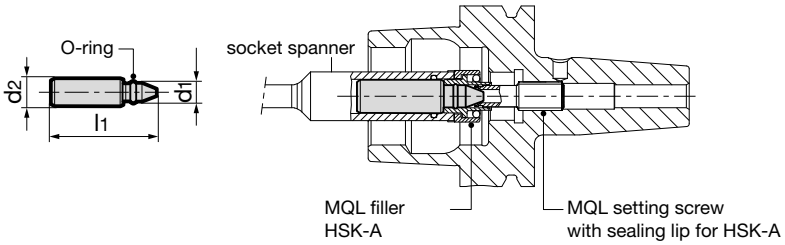

1 MQL BY GÜHRING

2 MQL BY GÜHRING

for HSK-A	d_1 mm	d_2 mm	l_1 mm	Article no. 4948 Order no.
32	4.0	5.9	30.0	**4948 6.032**
40	5.4	8.0	36.6	**4948 8.040**
50	6.5	10.0	40.1	**4948 10.050**
63	8.0	12.0	43.6	**4948 12.063**
80	8.0	14.0	46.1	**4948 14.080**
100	8.0	16.0	48.6	**4948 16.100**

HSK-A/HSK-C extensions with MQL 4 point clamping set

Product information
- MQL suitable
- for 1-channel-systems

Scope of delivery
- incl. MQL 4 point clamping set article no. 4930 and adaptor for extensions
- incl. brass locking ring article no. 4953

- order coolant supply set separately:
  - for automatic tool change article no. 4939
  - for manual tool change article no. 4940

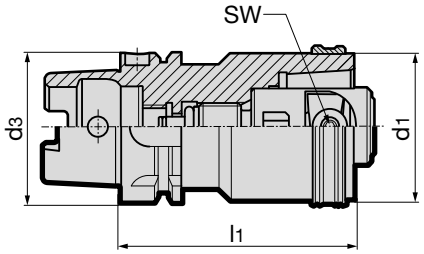

1 MQL BY GÜHRING

	Article no.	4350

HSK-A/HSK-C d_1 / d_3	l_1 mm	SW	kg	Order no.
32	60	2.5	0.30	4350 60.032
40	80	3.0	0.70	4350 80.040
50	80	4.0	0.90	4350 80.050
50	100	4.0	1.10	4350 100.050
63	100	5.0	1.80	4350 100.063
63	140	5.0	2.30	4350 140.063
80	120	6.0	4.20	4350 120.080
80	160	6.0	5.80	4350 160.080
100	140	8.0	8.00	4350 140.100

Length setting screws for conventional cooling

Product information
- To adapt MQL tool holders to meet the requirements of conventional wet machining. For plain end shanks.The height of screw head compensates the height of MQL taper.
- for MQL HSK-A shrink fit chucks and hydraulic chucks
- for use with shank according to DIN 6535 with plain shank end for conventional cooling
- the patented face orientated o-ring provides axial force clamping which eliminates concentricity errors

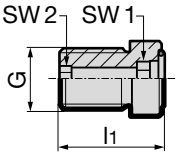

1 MQL BY GÜHRING

	Article no.	4941

for HSK-A	clamping-Ø	G	d_1 mm	l_1 mm	SW	Order no.
40	6	M5	6	15.0	2.5	4941 6.041
40	6	M7x1	6	15.0	2.5	4941 6.040
40	8	M7x1	6	18.0	3.0	4941 8.040
50	6	M8x1	8	14.0	2.5	4941 6.050
50	8	M8x1	7	18.0	3.0	4941 8.050
40 / 50	10	M8x1	10	17.7	4.0	4941 10.050
63/ 80/ 100	6	M10x1	9	22.0	2.5	4941 6.100
63/ 80/ 100	8	M10x1	9	22.0	3.0	4941 8.100
63/ 80/ 100	10	M10x1	10	16.2	4.0	4941 10.100
40/ 50/ 63/ 80/ 100	12	M10x1	10	16.2	5.0	4941 12.100
40/ 50/ 63/ 80/ 100	14	M10x1	10	17.2	5.0	4941 14.100
50/ 63/ 80/ 100	16	M12x1	16	18.2	6.0	4941 16.100
50/ 63/ 80/ 100	18	M12x1	16	19.2	6.0	4941 18.100
50/ 63/ 80/ 100	20	M16x1	16	19.2	8.0	4941 20.100
63/ 80/ 100	25	M16x1	16	22.7	8.0	4941 25.100
63/ 80/ 100	32	M16x1	16	26.7	8.0	4941 32.100

Product information

- for MQL single channel systems
- MQL coolant pressure up to max. 16 bar
- compensates synchronisation errors
- guarantees high thread quality and optimal tool life
- minimal length compensation ±0,3 mm in tension and compression direction balances very small pitch differences between synchro spindle and tap
- reduces an increase in axial forces during the cutting cycle to a minimum
- convenient hydraulic clamping using reduction bushes with active drive
- length-setting screw allows 3 mm readjustment
- Gühring MQL identifiable by green coloured ring

Scope of delivery

- incl. hexagon clamping key article no. 4912
- incl. MQL coolant supply set for manual tool change (filler) article no. 4513
- incl. adjustment key for MQL adjustment screws

- order MQL adjustment screw article no. 4305 separately
- order reduction bushes article no. 4605 or 4606 separately

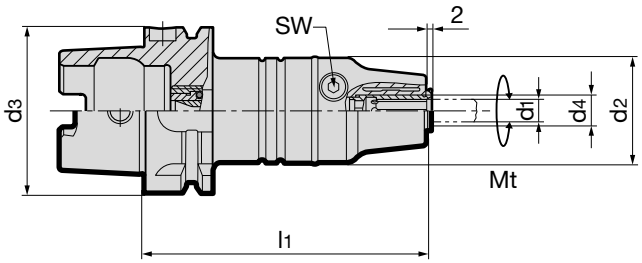

1 MQL BY GÜHRING

2 MQL BY GÜHRING

GÜHROSync

HSK-A d_3	d_4 mm	for shank-Ø d_1	for thread	d_2 mm	l_1 mm	Mt max. Nm	SW	kg	Article no. 4604 Order no.
63	12.00	2.8-10	M2-M12	40	106.5	26	4	1.5	**4604 12.063**
63	20.00	6-16	M4.5-M20	40	120.5	90	5	1.6	**4604 20.063**
100	12.00	2.8-10	M2-M12	40	113.0	26	4	2.8	**4604 12.100**
100	20.00	6-16	M4.5-M20	40	127.0	90	5	2.9	**4604 20.100**

Product information

- for MQL single channel systems
- MQL coolant pressure up to max. 16 bar
- compensates synchronisation errors
- guarantees high thread quality and optimal tool life
- minimal length compensation ±0,3 mm in tension and compression direction balances very small pitch differences between synchro spindle and tap
- reduces an increase in axial forces during the cutting cycle to a minimum
- convenient hydraulic clamping using reduction bushes with active drive
- length-setting screw allows 3 mm readjustment
- Gühring MQL identifiable by green coloured ring

Scope of delivery

- incl. hexagon clamping key article no. 4912
- incl. MQL coolant supply set for automatic tool change article no. 4508
- incl. adjustment key for MQL adjustment screws

- order MQL adjustment screw article no. 4305 separately
- order reduction bushes article no. 4605 or 4606 separately

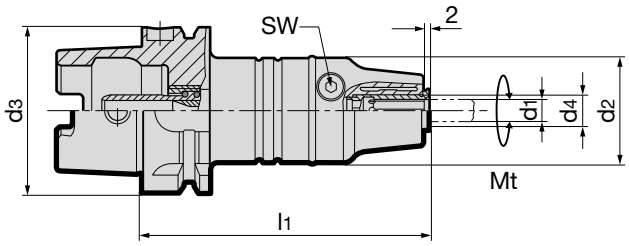

MQL 1 BY GÜHRING

GÜHROSync

									Article no.	4602
HSK-A d_3	d_4 mm	for shank-Ø d_1	for thread	d_2 mm	l_1 mm	Mt max. Nm	SW	kg		Order no.
63	12.00	2.8-10	M2-M12	40	106.5	26	4	1.5		**4602 12.063**
63	20.00	6-16	M4.5-M20	40	120.5	90	5	1.6		**4602 20.063**
100	12.00	2.8-10	M2-M12	40	113.0	26	4	2.8		**4602 12.100**
100	20.00	6-16	M4.5-M20	40	127.0	90	5	2.9		**4602 20.100**

Product information

- for MQL single and double channel systems
- MQL coolant pressure up to max. 16 bar
- compensates synchronisation errors
- guarantees high thread quality and optimal tool life
- minimal length compensation ±0,3 mm in tension and compression direction balances very small pitch differences between synchro spindle and tap
- reduces an increase in axial forces during the cutting cycle to a minimum
- convenient hydraulic clamping using reduction bushes with active drive
- length-setting screw allows 3 mm readjustment
- holder shank to DIN 1835-A or holding in precision chucks (hydraulic chucks or precision power chucks, shrink fit chucks for single application)
- Gühring MQL identifiable by green coloured ring

Scope of delivery

- incl. hexagon clamping key 4912
- incl. adjustment key for MQL adjustment screws

- order MQL adjustment screw 4305 separately
- order reduction bushes 4605 or 4606 separately

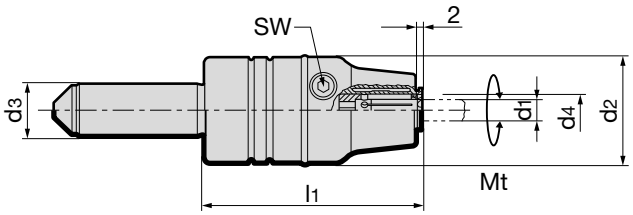

MQL 1-channel

1 MQL BY GÜHRING

2 MQL BY GÜHRING

GÜHROSync

									Article no. 4524
d_3 h6 mm	d_4 mm	for shank-Ø d_1	for thread	d_2 mm	l_1 mm	Mt max. Nm	SW	kg	**Order no.**
20	12.00	2.8-10	M2-M12	40	80	26	4	0.7	**4524 12.020**
20	20.00	6-16	M4.5-M20	40	94	90	5	0.8	**4524 20.020**

MQL HSK-A synchro tapping chucks for manual tool change

Product information
- for MQL single and double channel systems
- compensate synchronisation errors
- minimal length compensation ± 0,15 mm in tension and compression direction balances very small pitch differences between synchro spindle and tap, which can cause high frictional forces on the thread flanks and increase thread quality and tool life
- length-setting screw allows 2 to 3 mm readjustment
- MQL pressure up to max. 10 bar
- mounted MQL coolant supply pipe
- Gühring MQL identifiable by green coloured ring
- HSK-A to ISO 12164-1/DIN 69893-1

Scope of delivery
- incl. MQL coolant supply set article no. 4513 (filler) for manual tool change
- Incl. IC/ER clamping nut article no. 4306 (*see torque)
- incl. adjustment key for MQL adjustment screw
- order MQL adjustment screw article no. 4305 separately
- order sealing washer article no. 4335 separately
- order collet article no. 4308 separately
- order chuck spanner article no. 4913 for ER retaining nut separately

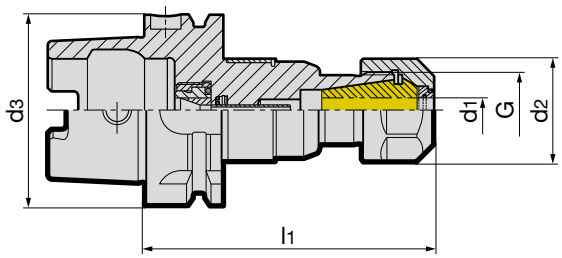

1 MQL BY GÜHRING
2 MQL BY GÜHRING

Article no. 4298

HSK-A d_3	nom. size	for thread	G	d_1 mm	d_2 mm	l_1 mm	torque* Nm	kg	Order no.
63	ER20	M4-M14	M25x1.5	4.0-11	34	95.5	35	1.00	**4298 20.063**
63	ER32	M4-M30	M40x1.5	4.0-20	50	109.0	136	1.50	**4298 32.063**

MQL HSK-A synchro tapping chucks for single channel systems for automatic tool change

Product information
- for MQL single channel systems
- compensate synchronisation errors
- minimal length compensation ± 0,15 mm in tension and compression direction balances very small pitch differences between synchro spindle and tap, which can cause high frictional forces on the thread flanks and increase thread quality and tool life
- length-setting screw allows 2 to 3 mm readjustment
- MQL pressure up to max. 10 bar
- mounted MQL coolant supply pipe
- Gühring MQL identifiable by green coloured ring
- HSK-A to ISO 12164-1/DIN 69893-1

Scope of delivery
- incl. MQL coolant supply set article no. 4508 for automatic tool change
- incl. sealed IC/ER clamping nut article no. 4306 (*see torque)
- incl. adjustment key for MQL adjustment screw
- order MQL adjustment screw article no. 4305 separately
- order sealing washer article no. 4335 separately
- order collet article no. 4308 separately
- order chuck spanner article no. 4913 for ER retaining nut separately

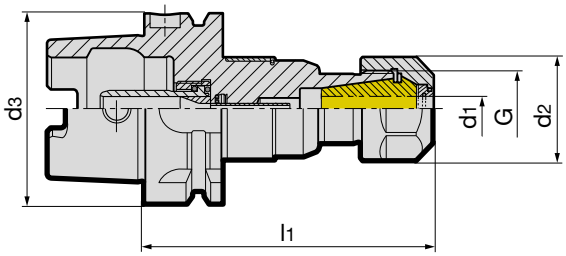

1 MQL BY GÜHRING

Article no. 4330

HSK-A d_3	nom. size	for thread	G	d_1 mm	d_2 mm	l_1 mm	torque* Nm	kg	Order no.
63	ER20	M4-M14	M25x1.5	4.0-11	34	95.5	35	1.00	**4330 20.063**
63	ER32	M4-M30	M40x1.5	4.0-20	50	109.0	136	1.50	**4330 32.063**
100	ER20	M4-M14	M25x1.5	4.0-11	34	102.0	35	2.40	**4330 20.100**
100	ER32	M4-M30	M40x1.5	4.0-20	50	115.5	136	3.00	**4330 32.100**

MQL coolant supply set for single channel HSK-A

Product information

- for MQL 1-channel tapping chucks and monolithic holders in accordance with the MQL works standard
- version sim. to DIN 69895
- for MQL 1-channel systems
- for tool holders with automatic tool clamping
- dimensions d_2 and l_1 based on installed condition

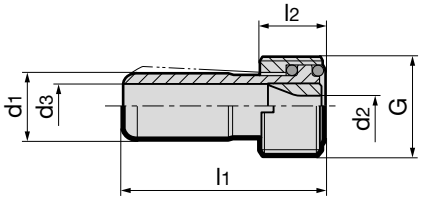

1 MQL BY GÜHRING

						Article no.	4508
for HSK-A	d_1 mm	d_2 mm	d_3 mm	l_1 mm	l_2 mm	G	Order no.
32	6.00	3.00	4.00	26.00	5.50	M10x1	**4508 10.032**
40	8.00	3.80	5.40	29.50	7.50	M12x1	**4508 12.040**
50	10.00	3.80	6.40	33.00	9.50	M16x1	**4508 16.050**
63	12.00	3.80	8.00	36.50	11.50	M18x1	**4508 18.063**
80	14.00	3.80	10.00	40.00	13.50	M20x1.5	**4508 20.080**
100	16.00	3.80	12.00	44.00	15.50	M24x1.5	**4508 24.100**

MQL coolant supply set HSK-A (filler)

Product information

- for MQL 1-channel tapping chucks and lithic holders in accordance with the MQL works standard
- for internal cooling MQL 1 and 2 channel systems
- for tool holders with manual tool clamping
- optimally sealed for MQL clamping set
- dimensions d_2 and l_1 based on installed condition

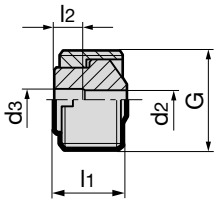

1 MQL BY GÜHRING

2 MQL BY GÜHRING

						Article no.	4513
for HSK-A	d_2 mm	d_3 mm	l_1 mm	l_2 mm	G	Order no.	
32	3.00	3.00	6.30	-	M10x1	**4513 10.032**	
40	3.60	4.00	8.30	5.00	M12x1	**4513 12.040**	
50	3.60	4.00	10.30	5.00	M16x1	**4513 16.050**	
50	5.00	5.00	10.30	-	M16x1	**4513 16.150**	
63	3.60	4.00	12.30	5.00	M18x1	**4513 18.063**	
63	6.00	6.00	12.30	-	M18x1	**4513 18.163**	
80	3.60	4.00	14.40	5.00	M20x1.5	**4513 20.080**	
80	8.00	8.00	14.40	-	M20x1.5	**4513 20.180**	
100	3.60	4.00	16.40	5.00	M24x1.5	**4513 24.100**	
100	8.00	8.00	16.40	-	M24x1.5	**4513 24.101**	

2 MQL BY GÜHRING

Our products for the MQL 2-channel technology are identified by this symbol.

Visual feature of the 2-channel system is the black coloured MQL length setting screw.

4:1

When selecting the tool holders please note: the ratio of cross-section A (mm2) of the supply pipe in the MQL 2-channel supply set to the sum of the cross-sections of the tool coolant duct exits should be maximum 4:1. This achieves quick reaction times when switching on the 2-channel MQL.

Product information
- to Gühring MQL standard
- for 2-channel-systems
- balancing quality: G6.3 / 15,000 rev./min
- for tool shank tolerance h6
- axial length setting

Scope of delivery
- incl. MQL adjustment screw article no.4621 and MQL coolant supply set article no. 4622
- incl. hexagon chuck key article no. 4912
- special dimensions on request

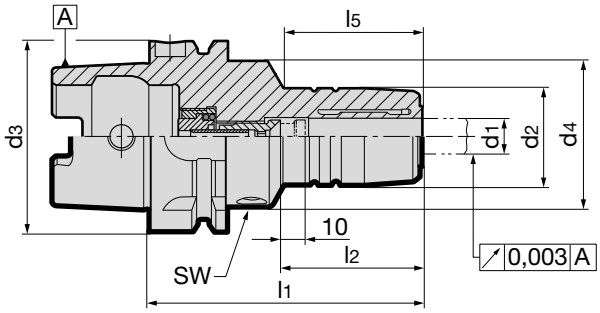

MQL 2 BY GÜHRING

HSK-A d_3	for shank Ø $d_{1\ h6}$ mm	4:1 A mm²	d_2 mm	d_4 mm	l_1 mm	l_2 mm	l_5 mm	incl. setting screw no. 4621 …	incl. filler no. 4622 …	SW	kg	Article no. 4611 Order no.
32	6	2.01	26	40	80	36	29	6.032	12.032	4	0.40	**4611 6.032**
32	6	4.15	26	40	80	36	29	6.132	12.132	4	0.40	**4611 6.132**
32	8	2.01	28	40	80	36	29	8.032	12.032	4	0.42	**4611 8.032**
32	8	4.15	28	40	80	36	29	8.132	12.132	4	0.42	**4611 8.132**
32	10	2.01	30	40	85	40	35	10.032	12.032	4	0.45	**4611 10.032**
32	10	4.15	30	40	85	40	35	10.132	12.132	4	0.45	**4611 10.132**
32	12	2.01	32	40	90	45	40	12.032	12.032	4	0.49	**4611 12.032**
32	12	4.15	32	40	90	45	40	12.132	12.132	4	0.49	**4611 12.132**
40	6	2.01	26	33.5	80	36	46	6.040	16.040	4	0.44	**4611 6.040**
40	6	4.15	26	33.5	80	36	46	6.140	16.140	4	0.44	**4611 6.140**
40	8	2.01	28	33.5	80	36	46	8.040	16.040	4	0.47	**4611 8.040**
40	8	4.15	28	33.5	80	36	46	8.140	16.140	4	0.47	**4611 8.140**
40	10	2.01	30	33.5	80	40	46	10.040	16.040	4	0.49	**4611 10.040**
40	10	4.15	30	33.5	80	40	46	10.140	16.140	4	0.49	**4611 10.140**
40	12	2.01	32	33.5	90	45	56	12.040	16.040	4	0.56	**4611 12.040**
40	12	4.15	32	33.5	90	45	56	12.140	16.140	4	0.56	**4611 12.140**
40	12	9.08	32	33.5	90	45	56	12.240	16.240	4	0.56	**4611 12.240**
50	6	2.01	26	40	80	36	38	6.050	10.050	4	0.95	**4611 6.050**
50	6	4.15	26	40	80	36	38	6.150	10.150	4	0.95	**4611 6.150**
50	8	2.01	28	40	80	36	38	8.050	10.050	4	0.95	**4611 8.050**
50	8	4.15	28	40	80	36	38	8.150	10.150	4	0.95	**4611 8.150**
50	10	2.01	30	40	85	40	44	10.050	10.050	4	0.95	**4611 10.050**
50	10	4.15	30	40	85	40	44	10.150	10.150	4	0.95	**4611 10.150**
50	12	2.01	32	40	90	45	49	12.050	18.050	4	0.95	**4611 12.050**
50	12	4.15	32	40	90	45	49	12.150	20.050	4	0.95	**4611 12.150**
50	12	9.08	32	40	90	45	49	12.250	20.150	4	0.95	**4611 12.250**
50	14	2.01	34	40	90	45	49	14.050	18.050	4	0.95	**4611 14.050**
50	14	4.15	34	40	90	45	49	14.150	20.050	4	0.95	**4611 14.150**
50	14	9.08	34	40	90	45	49	14.250	20.150	4	0.95	**4611 14.250**
50	16	2.01	38	53	95	48	36	16.050	18.050	5	1.25	**4611 16.050**
50	16	4.15	38	53	95	48	36	16.150	20.050	5	1.25	**4611 16.150**
50	16	9.08	38	53	95	48	36	16.250	20.150	5	1.25	**4611 16.250**
50	18	2.01	40	57	95	48	36	18.050	18.050	5	1.25	**4611 18.050**
50	18	4.15	40	57	95	48	36	18.150	20.050	5	1.25	**4611 18.150**
50	18	9.08	40	57	95	48	36	18.250	20.150	5	1.25	**4611 18.250**
50	20	4.15	42	60	100	50	39	20.050	20.050	5	1.25	**4611 20.050**
50	20	9.08	42	60	100	50	39	20.150	20.150	5	1.25	**4611 20.150**
50	20	16.62	42	60	100	50	39	20.250	20.250	5	1.25	**4611 20.250**
63	6	2.01	26	50	80	36	34.5	6.100	10.063	5	1.25	**4611 6.063**
63	6	4.15	26	50	80	36	34.5	6.101	10.163	5	1.25	**4611 6.163**
63	8	2.01	28	50	80	36	35.5	8.100	10.063	5	1.25	**4611 8.063**
63	8	4.15	28	50	80	36	35.5	8.101	10.163	5	1.25	**4611 8.163**
63	10	2.01	30	50	85	40	39	10.100	10.063	5	1.25	**4611 10.063**
63	10	4.15	30	50	85	40	39	10.101	10.163	5	1.25	**4611 10.163**
63	12	2.01	32	50	90	45	45	12.100	18.063	5	1.35	**4611 12.063**
63	12	4.15	32	50	90	45	45	12.101	20.063	5	1.35	**4611 12.163**

HSK-A d_3	for shank Ø $d_{1\ h6}$ mm	4:1 A mm²	d_2 mm	d_4 mm	l_1 mm	l_2 mm	l_5 mm	incl. setting screw no. 4621 …	incl. filler no. 4622 …	SW	kg	Article no. 4611 Order no.
63	12	9.08	32	50	90	45	45	12.102	20.163	5	1.35	**4611 12.263**
63	14	2.01	34	50	90	45	46	14.100	18.063	5	1.35	**4611 14.063**
63	14	4.15	34	50	90	45	46	14.101	20.063	5	1.35	**4611 14.163**
63	14	9.08	34	50	90	45	46	14.102	20.163	5	1.35	**4611 14.263**
63	16	2.01	38	50	95	48	51	16.100	18.063	5	1.45	**4611 16.063**
63	16	4.15	38	50	95	48	51	16.101	20.063	5	1.45	**4611 16.163**
63	16	9.08	38	50	95	48	51	16.102	20.163	5	1.45	**4611 16.263**
63	18	2.01	40	50	95	48	52	18.100	18.063	5	1.45	**4611 18.063**
63	18	4.15	40	50	95	48	52	18.101	20.063	5	1.45	**4611 18.163**
63	18	9.08	40	50	95	48	52	18.102	20.163	5	1.45	**4611 18.263**
63	20	4.15	42	50	100	50	58	20.100	20.063	5	1.45	**4611 20.063**
63	20	9.08	42	50	100	50	58	20.101	20.163	5	1.45	**4611 20.163**
63	20	16.62	42	50	100	50	58	20.102	20.263	5	1.45	**4611 20.263**
63	25	4.15	57	63	115	56	50	25.100	32.063	6	2.45	**4611 25.063**
63	25	9.08	57	63	115	56	50	25.101	32.163	6	2.45	**4611 25.163**
63	25	16.62	57	63	115	56	50	25.102	32.263	6	2.45	**4611 25.263**
63	32	4.15	64	75	120	60	58	32.100	32.063	6	3.10	**4611 32.063**
63	32	9.08	64	75	120	60	58	32.101	32.163	6	3.10	**4611 32.163**
63	32	16.62	64	75	120	60	58	32.102	32.263	6	3.10	**4611 32.263**
80	6	2.01	26	50	85	36	39	6.100	10.080	5	1.5	**4611 6.080**
80	6	4.15	26	50	85	36	39	6.101	10.180	5	1.49	**4611 6.180**
80	8	2.01	28	50	85	36	39	8.100	10.080	5	1.52	**4611 8.080**
80	8	4.15	28	50	85	36	39	8.101	10.180	5	1.52	**4611 8.180**
80	10	2.01	30	50	90	40	45	10.100	10.080	5	1.56	**4611 10.080**
80	10	4.15	30	50	90	40	45	10.101	10.180	5	1.56	**4611 10.180**
80	12	2.01	32	50	95	45	50	12.100	18.080	5	1.61	**4611 12.080**
80	12	4.15	32	50	95	45	50	12.101	32.080	5	1.61	**4611 12.180**
80	12	9.08	32	50	95	45	50	12.102	32.180	5	1.6	**4611 12.280**
80	14	2.01	34	50	95	45	50	14.100	18.080	5	1.64	**4611 14.080**
80	14	4.15	34	50	95	45	50	14.101	32.080	5	1.63	**4611 14.180**
80	14	9.08	34	50	95	45	50	14.102	32.180	5	1.63	**4611 14.280**
80	16	2.01	38	50	100	48	56	16.100	18.080	5	1.72	**4611 16.080**
80	16	4.15	38	50	100	48	56	16.101	32.080	5	1.72	**4611 16.180**
80	16	9.08	38	50	100	48	56	16.102	32.180	5	1.72	**4611 16.280**
80	18	2.01	40	50	100	48	56	18.100	18.080	5	1.76	**4611 18.080**
80	18	4.15	40	50	100	48	56	18.101	32.080	5	1.76	**4611 18.180**
80	18	9.08	40	50	100	48	56	18.102	32.180	5	1.75	**4611 18.280**
80	20	4.15	42	50	105	50	62	20.100	32.080	5	1.82	**4611 20.080**
80	20	9.08	42	50	105	50	62	20.101	32.180	5	1.82	**4611 20.180**
80	20	16.62	42	50	105	50	62	20.102	32.280	5	1.83	**4611 20.280**
80	25	4.15	57	63	115	56	70	25.100	32.080	6	2.6	**4611 25.080**
80	25	9.08	57	63	115	56	70	25.101	32.180	6	2.6	**4611 25.180**
80	25	16.62	57	63	115	56	70	25.102	32.280	6	2.6	**4611 25.280**
80	32	4.15	64	75	120	60	58	32.100	32.080	6	3.11	**4611 32.080**
80	32	9.08	64	75	120	60	58	32.101	32.180	6	3.11	**4611 32.180**
80	32	16.62	64	75	120	60	58	32.102	32.280	6	3.11	**4611 32.280**
100	6	2.01	26	50	85	36	36	6.100	10.100	5	2.60	**4611 6.100**
100	6	4.15	26	50	85	36	36	6.101	10.101	5	2.60	**4611 6.101**
100	8	2.01	28	50	85	36	36	8.100	10.100	5	2.60	**4611 8.100**
100	8	4.15	28	50	85	36	36	8.101	10.101	5	2.60	**4611 8.101**
100	10	2.01	30	50	90	40	42	10.100	10.100	5	2.60	**4611 10.100**
100	10	4.15	30	50	90	40	42	10.101	10.101	5	2.60	**4611 10.101**
100	12	2.01	32	50	95	45	47	12.100	18.100	5	2.65	**4611 12.100**
100	12	4.15	32	50	95	45	47	12.101	32.100	5	2.65	**4611 12.101**
100	12	9.08	32	50	95	45	47	12.102	32.101	5	2.65	**4611 12.102**
100	14	2.01	34	50	95	45	47	14.100	18.100	5	2.65	**4611 14.100**
100	14	4.15	34	50	95	45	47	14.101	32.100	5	2.65	**4611 14.101**
100	14	9.08	34	50	95	45	47	14.102	32.101	5	2.65	**4611 14.102**
100	16	2.01	38	50	100	48	53	16.100	18.100	5	2.85	**4611 16.100**
100	16	4.15	38	50	100	48	53	16.101	32.100	5	2.85	**4611 16.101**
100	16	9.08	38	50	100	48	53	16.102	32.101	5	2.85	**4611 16.102**
100	18	2.01	40	50	100	48	53	18.100	18.100	5	2.85	**4611 18.100**
100	18	4.15	40	50	100	48	53	18.101	32.100	5	2.85	**4611 18.101**
100	18	9.08	40	50	100	48	53	18.102	32.101	5	2.85	**4611 18.102**
100	20	4.15	42	50	105	50	59	20.100	32.100	5	3.35	**4611 20.100**
100	20	9.08	42	50	105	50	59	20.101	32.101	5	3.35	**4611 20.101**
100	20	16.62	42	50	105	50	59	20.102	32.102	5	3.35	**4611 20.102**
100	25	4.15	57	63	115	56	67	25.100	32.100	6	3.50	**4611 25.100**
100	25	9.08	57	63	115	56	67	25.101	32.101	6	3.50	**4611 25.101**
100	25	16.62	57	63	115	56	67	25.102	32.102	6	3.50	**4611 25.102**
100	32	4.15	64	75	120	60	72	32.100	32.100	6	3.95	**4611 32.100**
100	32	9.08	64	75	120	60	72	32.101	32.101	6	3.95	**4611 32.101**
100	32	16.62	64	75	120	60	72	32.102	32.102	6	3.95	**4611 32.102**

Product information
- to Gühring MQL standard
- for 2-channel-systems
- balancing quality: G6.3 / 15,000 rev./min
- for tool shank tolerance h6
- axial length setting

Scope of delivery
- incl. MQL adjustment screw with sealing lip article no. 4621 and MQL coolant supply set article no. 4623
- incl. hexagon chuck key article no. 4912

- special dimensions on request

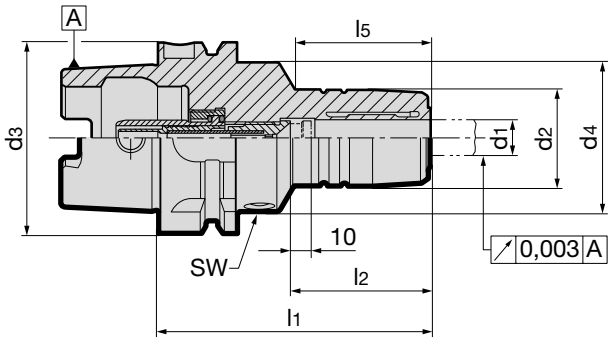

2 MQL BY GÜHRING

HSK-A d_3	for shank Ø $d_{1\ h6}$ mm	A mm^2 (4:1)	d_2 mm	d_4 mm	l_1 mm	l_2 mm	l_5 mm	incl. setting screw no. 4621 …	incl. filler no. 4623 …	SW	kg	Article no. 4612 Order no.
32	6	2.01	26	40	80	36	29	6.032	12.032	4	0.41	**4612 6.032**
32	6	4.15	26	40	80	36	29	6.132	12.132	4	0.41	**4612 6.132**
32	8	2.01	28	40	80	36	29	8.032	12.032	4	0.42	**4612 8.032**
32	8	4.15	28	40	80	36	29	8.132	12.132	4	0.42	**4612 8.132**
32	10	2.01	30	40	85	40	35	10.032	12.032	4	0.45	**4612 10.032**
32	10	4.15	30	40	85	40	35	10.132	12.132	4	0.45	**4612 10.132**
32	12	2.01	32	40	90	45	40	12.032	12.032	4	0.49	**4612 12.032**
32	12	4.15	32	40	90	45	40	12.132	12.132	4	0.49	**4612 12.132**
40	6	2.01	26	33.5	80	36	46	6.040	16.040	4	0.45	**4612 6.040**
40	6	4.15	26	33.5	80	36	46	6.140	16.140	4	0.45	**4612 6.140**
40	8	2.01	28	33.5	80	36	46	8.040	16.040	4	0.47	**4612 8.040**
40	8	4.15	28	33.5	80	36	46	8.140	16.140	4	0.47	**4612 8.140**
40	10	2.01	30	33.5	80	40	46	10.040	16.040	4	0.49	**4612 10.040**
40	10	4.15	30	33.5	80	40	46	10.140	16.140	4	0.49	**4612 10.140**
40	12	2.01	32	33.5	90	45	56	12.040	16.040	4	0.57	**4612 12.040**
40	12	4.15	32	33.5	90	45	56	12.140	16.140	4	0.57	**4612 12.140**
40	12	9.08	32	33.5	90	45	56	12.240	16.240	4	0.57	**4612 12.240**
50	6	2.01	26	40	80	36	38	6.050	10.050	4	0.95	**4612 6.050**
50	6	4.15	26	40	80	36	38	6.150	10.150	4	0.95	**4612 6.150**
50	8	2.01	28	40	80	36	38	8.050	10.050	4	0.95	**4612 8.050**
50	8	4.15	28	40	80	36	38	8.150	10.150	4	0.95	**4612 8.150**
50	10	2.01	30	40	85	40	44	10.050	10.050	4	0.95	**4612 10.050**
50	10	4.15	30	40	85	40	44	10.150	10.150	4	0.95	**4612 10.150**
50	12	2.01	32	40	90	45	49	12.050	18.050	4	0.95	**4612 12.050**
50	12	4.15	32	40	90	45	49	12.150	20.050	4	0.95	**4612 12.150**
50	12	9.08	32	40	90	45	49	12.250	20.150	4	0.95	**4612 12.250**
50	14	2.01	34	40	90	45	49	14.050	18.050	4	0.95	**4612 14.050**
50	14	4.15	34	40	90	45	49	14.150	20.050	4	0.95	**4612 14.150**
50	14	9.08	34	40	90	45	49	14.250	20.150	4	0.95	**4612 14.250**
50	16	2.01	38	53	95	48	36	16.050	18.050	5	1.25	**4612 16.050**
50	16	4.15	38	53	95	48	36	16.150	20.050	5	1.25	**4612 16.150**
50	16	9.08	38	53	95	48	36	16.250	20.150	5	1.25	**4612 16.250**
50	18	2.01	40	57	95	48	36	18.050	18.050	5	1.25	**4612 18.050**
50	18	4.15	40	57	95	48	36	18.150	20.050	5	1.25	**4612 18.150**
50	18	9.08	40	57	95	48	36	18.250	20.150	5	1.25	**4612 18.250**
50	20	4.15	42	60	100	50	39	20.050	20.050	5	1.25	**4612 20.050**
50	20	9.08	42	60	100	50	39	20.150	20.150	5	1.25	**4612 20.150**
50	20	16.62	42	60	100	50	39	20.250	20.250	5	1.25	**4612 20.250**
63	6	2.01	26	50	80	36	34.5	6.100	10.063	5	1.25	**4612 6.063**
63	6	4.15	26	50	80	36	34.5	6.101	10.163	5	1.25	**4612 6.163**
63	8	2.01	28	50	80	36	35.5	8.100	10.063	5	1.25	**4612 8.063**
63	8	4.15	28	50	80	36	35.5	8.101	10.163	5	1.25	**4612 8.163**
63	10	2.01	30	50	85	40	39	10.100	10.063	5	1.25	**4612 10.063**
63	10	4.15	30	50	85	40	39	10.101	10.163	5	1.25	**4612 10.163**
63	12	2.01	32	50	90	45	45	12.100	18.063	5	1.35	**4612 12.063**
63	12	4.15	32	50	90	45	45	12.101	20.063	5	1.35	**4612 12.163**
63	12	9.08	32	50	90	45	45	12.102	20.163	5	1.35	**4612 12.263**
63	14	2.01	34	50	90	45	46	14.100	18.063	5	1.35	**4612 14.063**

HSK-A d_3	for shank Ø $d_{1\ h6}$ mm	4:1 A mm^2	d_2 mm	d_4 mm	l_1 mm	l_2 mm	l_5 mm	incl. setting screw no. 4621 …	incl. filler no. 4623 …	SW	kg	Article no. 4612 Order no.
63	14	4.15	34	50	90	45	46	14.101	20.063	5	1.35	**4612 14.163**
63	14	9.08	34	50	90	45	46	14.102	20.163	5	1.35	**4612 14.263**
63	16	2.01	38	50	95	48	51	16.100	18.063	5	1.45	**4612 16.063**
63	16	4.15	38	50	95	48	51	16.101	20.063	5	1.45	**4612 16.163**
63	16	9.08	38	50	95	48	51	16.102	20.163	5	1.45	**4612 16.263**
63	18	2.01	40	50	95	48	52	18.100	18.063	5	1.45	**4612 18.063**
63	18	4.15	40	50	95	48	52	18.101	20.063	5	1.45	**4612 18.163**
63	18	9.08	40	50	95	48	52	18.102	20.163	5	1.45	**4612 18.263**
63	20	4.15	42	50	100	50	58	20.100	20.063	5	1.45	**4612 20.063**
63	20	9.08	42	50	100	50	58	20.101	20.163	5	1.45	**4612 20.163**
63	20	16.62	42	50	100	50	58	20.102	20.263	5	1.45	**4612 20.263**
63	25	4.15	57	63	115	56	50	25.100	32.063	6	2.45	**4612 25.063**
63	25	9.08	57	63	115	56	50	25.101	32.163	6	2.45	**4612 25.163**
63	25	16.62	57	63	115	56	50	25.102	32.263	6	2.45	**4612 25.263**
63	32	4.15	64	75	120	60	58	32.100	32.063	6	3.10	**4612 32.063**
63	32	9.08	64	75	120	60	58	32.101	32.163	6	3.10	**4612 32.163**
63	32	16.62	64	75	120	60	58	32.102	32.263	6	3.10	**4612 32.263**
80	6	2.01	26	50	85	36	39	6.100	10.080	5	1.52	**4612 6.080**
80	6	4.15	26	50	85	36	39	6.101	10.180	5	1.52	**4612 6.180**
80	8	2.01	28	50	85	36	39	8.100	10.080	5	1.54	**4612 8.080**
80	8	4.15	28	50	85	36	39	8.101	10.180	5	1.54	**4612 8.180**
80	10	2.01	30	50	90	40	45	10.100	10.080	5	1.58	**4612 10.080**
80	10	4.15	30	50	90	40	45	10.101	10.180	5	1.58	**4612 10.180**
80	12	2.01	32	50	95	45	50	12.100	18.080	5	1.63	**4612 12.080**
80	12	4.15	32	50	95	45	50	12.101	32.080	5	1.63	**4612 12.180**
80	12	9.08	32	50	95	45	50	12.102	32.180	5	1.63	**4612 12.280**
80	14	2.01	34	50	95	45	50	14.100	18.080	5	1.66	**4612 14.080**
80	14	4.15	34	50	95	45	50	14.101	32.080	5	1.66	**4612 14.180**
80	14	9.08	34	50	95	45	50	14.102	32.180	5	1.65	**4612 14.280**
80	16	2.01	38	50	100	48	56	16.100	18.080	5	1.75	**4612 16.080**
80	16	4.15	38	50	100	48	56	16.101	32.080	5	1.74	**4612 16.180**
80	16	9.08	38	50	100	48	56	16.102	32.180	5	1.74	**4612 16.280**
80	18	2.01	40	50	100	48	56	18.100	18.080	5	1.78	**4612 18.080**
80	18	4.15	40	50	100	48	56	18.101	32.080	5	1.78	**4612 18.180**
80	18	9.08	40	50	100	48	56	18.102	32.180	5	1.77	**4612 18.280**
80	20	4.15	42	50	105	50	62	20.100	32.080	5	1.85	**4612 20.080**
80	20	9.08	42	50	105	50	62	20.101	32.180	5	1.84	**4612 20.180**
80	20	16.62	42	50	105	50	62	20.102	32.280	5	1.84	**4612 20.280**
80	25	4.15	57	63	115	56	70	25.100	32.080	6	2.62	**4612 25.080**
80	25	9.08	57	63	115	56	70	25.101	32.180	6	2.62	**4612 25.180**
80	25	16.62	57	63	115	56	70	25.102	32.280	6	2.62	**4612 25.280**
80	32	4.15	64	75	120	60	58	32.100	32.080	6	3.13	**4612 32.080**
80	32	9.08	64	75	120	60	58	32.101	32.180	6	3.13	**4612 32.180**
80	32	16.62	64	75	120	60	58	32.102	32.280	6	3.13	**4612 32.280**
100	6	2.01	26	50	85	36	36	6.100	10.100	5	2.60	**4612 6.100**
100	6	4.15	26	50	85	36	36	6.101	10.101	5	2.60	**4612 6.101**
100	8	2.01	28	50	85	36	36	8.100	10.100	5	2.60	**4612 8.100**
100	8	4.15	28	50	85	36	36	8.101	10.101	5	2.60	**4612 8.101**
100	10	2.01	30	50	90	40	42	10.100	10.100	5	2.60	**4612 10.100**
100	10	4.15	30	50	90	40	42	10.101	10.101	5	2.60	**4612 10.101**
100	12	2.01	32	50	95	45	47	12.100	18.100	5	2.65	**4612 12.100**
100	12	4.15	32	50	95	45	47	12.101	32.100	5	2.65	**4612 12.101**
100	12	9.08	32	50	95	45	47	12.102	32.101	5	2.65	**4612 12.102**
100	14	2.01	34	50	95	45	47	14.100	18.100	5	2.65	**4612 14.100**
100	14	4.15	34	50	95	45	47	14.101	32.100	5	2.65	**4612 14.101**
100	14	9.08	34	50	95	45	47	14.102	32.101	5	2.65	**4612 14.102**
100	16	2.01	38	50	100	48	53	16.100	18.100	5	2.85	**4612 16.100**
100	16	4.15	38	50	100	48	53	16.101	32.100	5	2.85	**4612 16.101**
100	16	9.08	38	50	100	48	53	16.102	32.101	5	2.85	**4612 16.102**
100	18	2.01	40	50	100	48	53	18.100	18.100	5	2.85	**4612 18.100**
100	18	4.15	40	50	100	48	53	18.101	32.100	5	2.85	**4612 18.101**
100	18	9.08	40	50	100	48	53	18.102	32.101	5	2.85	**4612 18.102**
100	20	4.15	42	50	105	50	59	20.100	32.100	5	3.35	**4612 20.100**
100	20	9.08	42	50	105	50	59	20.101	32.101	5	3.35	**4612 20.101**
100	20	16.62	42	50	105	50	59	20.102	32.102	5	3.35	**4612 20.102**
100	25	4.15	57	63	115	56	67	25.100	32.100	6	3.50	**4612 25.100**
100	25	9.08	57	63	115	56	67	25.101	32.101	6	3.50	**4612 25.101**
100	25	16.62	57	63	115	56	67	25.102	32.102	6	3.50	**4612 25.102**
100	32	4.15	64	75	120	60	72	32.100	32.100	6	3.95	**4612 32.100**
100	32	9.08	64	75	120	60	72	32.101	32.101	6	3.95	**4612 32.101**
100	32	16.62	64	75	120	60	72	32.102	32.102	6	3.95	**4612 32.102**

Product information

- to Gühring MQL standard
- for 2-channel-systems
- balancing quality: G6.3 / 15,000 rev./min
- incl. balancing thread 4xM6/6xM6
- for tool shank tolerance h6
- also available in the lengths
  l1 = 120 mm (concentricity 4 µm)
  and 160 mm (concentricity 5 µm)

Scope of delivery

- incl. MQL adjustment screw article no. 4621 and MQL coolant supply set article no. 4622

- special dimensions on request

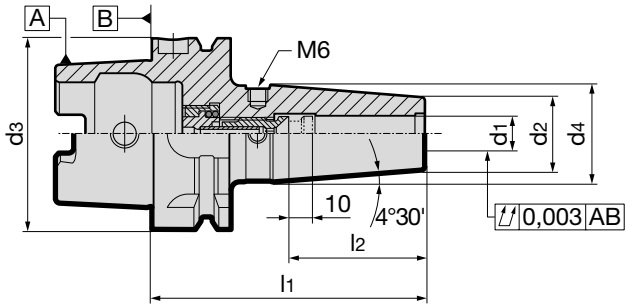

2 MQL BY GÜHRING

										Article no.	4613
HSK-A d_3	for shank Ø $d_{1\ h6}$ mm	4:1 A mm²	d_2 mm	d_4 mm	l_1 mm	l_2 mm	incl. setting screw no. 4621 …	incl. filler no. 4622 …	kg		Order no.
32	6	2.01	21	25.5	80	36	6.032	12.032	0.30		**4613 6.032**
32	6	4.15	21	25.5	80	36	6.132	12.132	0.30		**4613 6.132**
32	8	2.01	21	25.5	80	36	8.032	12.032	0.30		**4613 8.032**
32	8	4.15	21	25.5	80	36	8.132	12.132	0.30		**4613 8.132**
32	10	2.01	24	31.7	85	40	10.032	12.032	0.30		**4613 10.032**
32	10	4.15	24	31.7	85	40	10.132	12.132	0.30		**4613 10.132**
32	12	2.01	24	32.3	90	45	12.032	12.032	0.30		**4613 12.032**
32	12	4.15	24	32.3	90	45	12.132	12.132	0.30		**4613 12.132**
40	6	2.01	21	27	80	36	6.040	16.040	0.40		**4613 6.040**
40	6	4.15	21	27	80	36	6.140	16.140	0.40		**4613 6.140**
40	8	2.01	21	27	80	36	8.040	16.040	0.40		**4613 8.040**
40	8	4.15	21	27	80	36	8.140	16.140	0.40		**4613 8.140**
40	10	2.01	24	32	80	40	10.040	16.040	0.50		**4613 10.040**
40	10	4.15	24	32	80	40	10.140	16.140	0.50		**4613 10.140**
40	12	2.01	24	32	90	45	12.040	16.040	0.50		**4613 12.040**
40	12	4.15	24	32	90	45	12.140	16.140	0.50		**4613 12.140**
40	12	9.08	24	32	90	45	12.240	16.240	0.50		**4613 12.240**
40	14	2.01	27	33.5	90	45	14.040	16.040	0.60		**4613 14.040**
40	14	4.15	27	33.5	90	45	14.140	16.140	0.60		**4613 14.140**
40	14	9.08	27	33.5	90	45	14.240	16.240	0.60		**4613 14.240**
40	16	2.01	27	33.5	90	48	16.040	16.040	0.50		**4613 16.040**
40	16	4.15	27	33.5	90	48	16.140	16.140	0.50		**4613 16.140**
40	16	9.08	27	33.5	90	48	16.240	16.240	0.50		**4613 16.240**
50	6	2.01	21	27	80	36	6.050	10.050	0.60		**4613 6.050**
50	6	4.15	21	27	80	36	6.150	10.150	0.60		**4613 6.150**
50	8	2.01	21	27	80	36	8.050	10.050	0.60		**4613 8.050**
50	8	4.15	21	27	80	36	8.150	10.150	0.60		**4613 8.150**
50	10	2.01	24	32	85	40	10.050	10.050	0.70		**4613 10.050**
50	10	4.15	24	32	85	40	10.150	10.150	0.70		**4613 10.150**
50	12	2.01	24	32	90	45	12.050	18.050	0.70		**4613 12.050**
50	12	4.15	24	32	90	45	12.150	20.050	0.70		**4613 12.150**
50	12	9.08	24	32	90	45	12.250	20.150	0.70		**4613 12.250**
50	14	2.01	27	34	90	45	14.050	18.050	0.70		**4613 14.050**
50	14	4.15	27	34	90	45	14.150	20.050	0.70		**4613 14.150**
50	14	9.08	27	34	90	45	14.250	20.150	0.70		**4613 14.250**
50	16	2.01	27	34	95	48	16.050	18.050	0.70		**4613 16.050**
50	16	4.15	27	34	95	48	16.150	20.050	0.70		**4613 16.150**
50	16	9.08	27	34	95	48	16.250	20.150	0.70		**4613 16.250**
50	18	2.01	33	41.5	95	48	18.050	18.050	0.90		**4613 18.050**
50	18	4.15	33	41.5	95	48	18.150	20.050	0.90		**4613 18.150**
50	18	9.08	33	41.5	95	48	18.250	20.150	0.90		**4613 18.250**
50	20	4.15	33	41.5	100	50	20.050	20.050	0.90		**4613 20.050**
50	20	9.08	33	41.5	100	50	20.150	20.150	0.90		**4613 20.150**
50	20	16.62	33	41.5	100	50	20.250	20.250	0.90		**4613 20.250**
63	6	2.01	21	27	80	36	6.100	10.063	0.70		**4613 6.063**
63	6	4.15	21	27	80	36	6.101	10.163	0.70		**4613 6.163**

HSK-A d_3	for shank Ø $d_{1\ h6}$ mm	4:1 A mm^2	d_2 mm	d_4 mm	l_1 mm	l_2 mm	incl. setting screw no. 4621 …	incl. filler no. 4622 ...	kg	Article no. 4613 Order no.
63	8	2.01	21	27	80	36	8.100	10.063	0.70	**4613 8.063**
63	8	4.15	21	27	80	36	8.101	10.163	0.70	**4613 8.163**
63	10	2.01	24	32	85	40	10.100	10.063	0.70	**4613 10.063**
63	10	4.15	24	32	85	40	10.101	10.163	0.70	**4613 10.163**
63	12	2.01	24	32	90	45	12.100	18.063	0.80	**4613 12.063**
63	12	4.15	24	32	90	45	12.101	20.063	0.80	**4613 12.163**
63	12	9.08	24	32	90	45	12.102	20.163	0.80	**4613 12.263**
63	14	2.01	27	34	90	45	14.100	18.063	0.80	**4613 14.063**
63	14	4.15	27	34	90	45	14.101	20.063	0.80	**4613 14.163**
63	14	9.08	27	34	90	45	14.102	20.163	0.80	**4613 14.263**
63	16	2.01	27	34	95	48	16.100	18.063	0.90	**4613 16.063**
63	16	4.15	27	34	95	48	16.101	20.063	0.90	**4613 16.163**
63	16	9.08	27	34	95	48	16.102	20.163	0.90	**4613 16.263**
63	18	2.01	33	42	95	48	18.100	18.063	0.90	**4613 18.063**
63	18	4.15	33	42	95	48	18.101	20.063	0.90	**4613 18.163**
63	18	9.08	33	42	95	48	18.102	20.163	0.90	**4613 18.263**
63	20	4.15	33	42	100	50	20.100	20.063	1.00	**4613 20.063**
63	20	9.08	33	42	100	50	20.101	20.163	1.00	**4613 20.163**
63	20	16.62	33	42	100	50	20.102	20.263	1.00	**4613 20.263**
63	25	4.15	44	52.5	115	56	25.100	32.063	1.00	**4613 25.063**
63	25	9.08	44	52.5	115	56	25.101	32.163	1.00	**4613 25.163**
63	25	16.62	44	52.5	115	56	25.102	32.263	1.00	**4613 25.263**
63	32	4.15	44	52.5	120	60	32.100	32.063	1.10	**4613 32.063**
63	32	9.08	44	52.5	120	60	32.101	32.163	1.10	**4613 32.163**
63	32	16.62	44	52.5	120	60	32.102	32.263	1.10	**4613 32.263**
63	6	2.01	21	27	120	36	6.032	208.063	0.90	**4613 206.063**
63	6	4.15	21	27	120	36	6.132	208.163	0.90	**4613 206.163**
63	8	2.01	21	27	120	36	8.040	208.063	1.00	**4613 208.063**
63	8	4.15	21	27	120	36	8.140	208.163	1.00	**4613 208.163**
63	10	2.01	24	32	120	40	10.050	210.063	1.10	**4613 210.063**
63	10	4.15	24	32	120	40	10.150	210.063	1.10	**4613 210.163**
63	12	2.01	24	32	120	45	12.100	214.063	1.20	**4613 212.063**
63	12	4.15	24	32	120	45	12.101	214.163	1.20	**4613 212.163**
63	12	9.08	24	32	120	45	12.102	214.263	1.20	**4613 212.263**
63	14	2.01	27	34	120	45	14.100	214.063	1.20	**4613 214.063**
63	14	4.15	27	34	120	45	14.101	214.163	1.20	**4613 214.163**
63	14	9.08	27	34	120	45	14.102	214.263	1.20	**4613 214.263**
63	16	2.01	27	34	120	48	16.100	218.063	1.20	**4613 216.063**
63	16	4.15	27	34	120	48	16.101	218.163	1.20	**4613 216.163**
63	16	9.08	27	34	120	48	16.102	218.263	1.20	**4613 216.263**
63	18	2.01	33	42	120	48	18.100	218.063	1.40	**4613 218.063**
63	18	4.15	33	42	120	48	18.101	218.163	1.40	**4613 218.163**
63	18	9.08	33	42	120	48	18.102	218.263	1.40	**4613 218.263**
63	20	4.15	33	42	120	50	20.100	220.063	1.40	**4613 220.063**
63	20	9.08	33	42	120	50	20.101	220.163	1.40	**4613 220.163**
63	20	16.62	33	42	120	50	20.102	220.263	1.40	**4613 220.263**
63	6	2.01	21	27	160	36	6.032	108.063	0.80	**4613 106.063**
63	6	4.15	21	27	160	36	6.132	108.163	0.80	**4613 106.163**
63	8	2.01	21	27	160	36	8.040	108.063	0.80	**4613 108.063**
63	8	4.15	21	27	160	36	8.140	108.163	0.80	**4613 108.163**
63	10	2.01	24	32	160	40	10.050	110.063	0.90	**4613 110.063**
63	10	4.15	24	32	160	40	10.150	110.163	0.90	**4613 110.163**
63	12	2.01	24	32	160	45	12.100	114.063	0.90	**4613 112.063**
63	12	4.15	24	32	160	45	12.101	114.163	0.90	**4613 112.163**
63	12	9.08	24	32	160	45	12.102	114.263	0.90	**4613 112.263**
63	14	2.01	27	34	160	45	14.100	114.063	1.00	**4613 114.063**
63	14	4.15	27	34	160	45	14.101	114.163	1.00	**4613 114.163**
63	14	9.08	27	34	160	45	14.102	114.263	1.00	**4613 114.263**
63	16	2.01	27	34	160	48	16.100	118.063	1.00	**4613 116.063**
63	16	4.15	27	34	160	48	16.101	118.163	1.00	**4613 116.163**
63	16	9.08	27	34	160	48	16.102	118.263	1.00	**4613 116.263**
63	18	2.01	33	42	160	48	18.100	118.063	1.20	**4613 118.063**
63	18	4.15	33	42	160	48	18.101	118.163	1.20	**4613 118.163**
63	18	9.08	33	42	160	48	18.102	118.263	1.20	**4613 118.263**
63	20	4.15	33	42	160	50	20.100	120.063	1.20	**4613 120.063**
63	20	9.08	33	42	160	50	20.101	120.163	1.20	**4613 120.163**
63	20	16.62	33	42	160	50	20.102	120.263	1.20	**4613 120.263**
63	25	4.15	44	52.5	160	56	25.100	125.063	1.80	**4613 125.063**
63	25	9.08	44	52.5	160	56	25.101	125.163	1.80	**4613 125.163**

HSK-A d_3	for shank Ø $d_{1\ h6}$ mm	4:1 A mm²	d_2 mm	d_4 mm	l_1 mm	l_2 mm	incl. setting screw no. 4621 …	incl. filler no. 4622 ...	kg	Article no. 4613 Order no.
63	25	16.62	44	52.5	160	56	25.102	125.263	1.80	**4613 125.263**
63	32	4.15	44	52.5	160	60	32.100	132.063	1.70	**4613 132.063**
63	32	9.08	44	52.5	160	60	32.101	132.163	1.70	**4613 132.163**
63	32	16.62	44	52.5	160	60	32.102	132.263	1.70	**4613 132.263**
80	6	2.01	21	27	85	36	6.100	10.080	1.30	**4613 6.080**
80	6	4.15	21	27	85	36	6.101	10.180	1.30	**4613 6.180**
80	8	2.01	21	27	85	36	8.100	10.080	1.30	**4613 8.080**
80	8	4.15	21	27	85	36	8.101	10.180	1.30	**4613 8.180**
80	10	2.01	24	32	90	40	10.100	10.080	1.40	**4613 10.080**
80	10	4.15	24	32	90	40	10.101	10.180	1.40	**4613 10.180**
80	12	2.01	24	32	95	45	12.100	18.080	1.40	**4613 12.080**
80	12	4.15	24	32	95	45	12.101	32.080	1.40	**4613 12.180**
80	12	9.08	24	32	95	45	12.102	32.180	1.40	**4613 12.280**
80	14	2.01	27	34	95	45	14.100	18.080	1.50	**4613 14.080**
80	14	4.15	27	34	95	45	14.101	32.080	1.50	**4613 14.180**
80	14	9.08	27	34	95	45	14.102	32.180	1.50	**4613 14.280**
80	16	2.01	27	34	100	48	16.100	18.080	1.50	**4613 16.080**
80	16	4.15	27	34	100	48	16.101	32.080	1.50	**4613 16.180**
80	16	9.08	27	34	100	48	16.102	32.180	1.50	**4613 16.280**
80	18	2.01	33	42	100	48	18.100	18.080	1.70	**4613 18.080**
80	18	4.15	33	42	100	48	18.101	32.080	1.70	**4613 18.180**
80	18	9.08	33	42	100	48	18.102	32.180	1.70	**4613 18.280**
80	20	4.15	33	42	105	50	20.100	32.080	1.70	**4613 20.080**
80	20	9.08	33	42	105	50	20.101	32.180	1.70	**4613 20.180**
80	20	16.62	33	42	105	50	20.102	32.280	1.70	**4613 20.280**
80	25	4.15	44	53	115	56	25.100	32.080	2.20	**4613 25.080**
80	25	9.08	44	53	115	56	25.101	32.180	2.20	**4613 25.180**
80	25	16.62	44	53	115	56	25.102	32.280	2.20	**4613 25.280**
80	32	4.15	44	53	120	60	32.100	32.080	2.10	**4613 32.080**
80	32	9.08	44	53	120	60	32.101	32.180	2.10	**4613 32.180**
80	32	16.62	44	53	120	60	32.102	32.280	2.10	**4613 32.280**
100	6	2.01	21	27	85	36	6.100	10.100	2.10	**4613 6.100**
100	6	4.15	21	27	85	36	6.101	10.101	2.10	**4613 6.101**
100	8	2.01	21	27	85	36	8.100	10.100	2.20	**4613 8.100**
100	8	4.15	21	27	85	36	8.101	10.101	2.20	**4613 8.101**
100	10	2.01	24	32	90	40	10.100	10.100	2.30	**4613 10.100**
100	10	4.15	24	32	90	40	10.101	10.101	2.30	**4613 10.101**
100	12	2.01	24	32	95	45	12.100	18.100	2.30	**4613 12.100**
100	12	4.15	24	32	95	45	12.101	32.100	2.30	**4613 12.101**
100	12	9.08	24	32	95	45	12.102	32.101	2.30	**4613 12.102**
100	14	2.01	27	34	95	45	14.100	18.100	2.30	**4613 14.100**
100	14	4.15	27	34	95	45	14.101	32.100	2.30	**4613 14.101**
100	14	9.08	27	34	95	45	14.102	32.101	2.30	**4613 14.102**
100	16	2.01	27	34	100	48	16.100	18.100	2.30	**4613 16.100**
100	16	4.15	27	34	100	48	16.101	32.100	2.30	**4613 16.101**
100	16	9.08	27	34	100	48	16.102	32.101	2.30	**4613 16.102**
100	18	2.01	33	42	100	48	18.100	18.100	2.50	**4613 18.100**
100	18	4.15	33	42	100	48	18.101	32.100	2.50	**4613 18.101**
100	18	9.08	33	42	100	48	18.102	32.101	2.50	**4613 18.102**
100	20	4.15	33	42	105	50	20.100	32.100	2.50	**4613 20.100**
100	20	9.08	33	42	105	50	20.101	32.101	2.50	**4613 20.101**
100	20	16.62	33	42	105	50	20.102	32.102	2.50	**4613 20.102**
100	25	4.15	44	53	115	56	25.100	32.100	3.00	**4613 25.100**
100	25	9.08	44	53	115	56	25.101	32.101	3.00	**4613 25.101**
100	25	16.62	44	53	115	56	25.102	32.102	3.00	**4613 25.102**
100	32	4.15	44	53	120	60	32.100	32.100	3.00	**4613 32.100**
100	32	9.08	44	53	120	60	32.101	32.101	3.00	**4613 32.101**
100	32	16.62	44	53	120	60	32.102	32.102	3.00	**4613 32.102**
100	6	2.01	21	27	160	36	6.032	108.100	2.60	**4613 106.100**
100	6	4.15	21	27	160	36	6.132	108.101	2.60	**4613 106.101**
100	8	2.01	21	27	160	36	8.040	108.100	2.50	**4613 108.100**
100	8	4.15	21	27	160	36	8.140	108.101	2.50	**4613 108.101**
100	10	2.01	24	32	160	40	10.050	110.100	2.70	**4613 110.100**
100	10	4.15	24	32	160	40	10.150	110.101	2.70	**4613 110.101**
100	12	2.01	24	32	160	45	12.100	114.100	2.70	**4613 112.100**
100	12	4.15	24	32	160	45	12.101	114.101	2.70	**4613 112.101**
100	12	9.08	24	32	160	45	12.102	114.102	2.70	**4613 112.102**
100	14	2.01	27	34	160	45	14.100	114.100	2.80	**4613 114.100**

								Article no.		4613
HSK-A d_3	for shank Ø $d_{1\ h6}$ mm	4:1 A mm^2	d_2 mm	d_4 mm	l_1 mm	l_2 mm	incl. setting screw no. 4621 …	incl. filler no. 4622 ...	kg	Order no.
100	14	4.15	27	34	160	45	14.101	114.101	2.80	**4613 114.101**
100	14	9.08	27	34	160	45	14.102	114.102	2.80	**4613 114.102**
100	16	2.01	27	34	160	48	16.100	118.100	2.80	**4613 116.100**
100	16	4.15	27	34	160	48	16.101	118.101	2.80	**4613 116.101**
100	16	9.08	27	34	160	48	16.102	118.102	2.80	**4613 116.102**
100	18	2.01	33	42	160	48	18.100	118.100	3.20	**4613 118.100**
100	18	4.15	33	42	160	48	18.101	118.101	3.20	**4613 118.101**
100	18	9.08	33	42	160	48	18.102	118.102	3.20	**4613 118.102**
100	20	4.15	33	42	160	50	20.100	120.100	3.10	**4613 120.100**
100	20	9.08	33	42	160	50	20.101	120.101	3.10	**4613 120.101**
100	20	16.62	33	42	160	50	20.102	120.102	3.10	**4613 120.102**
100	25	4.15	44	53	160	56	25.100	125.100	3.90	**4613 125.100**
100	25	9.08	44	53	160	56	25.101	125.101	3.90	**4613 125.101**
100	25	16.62	44	53	160	56	25.102	125.102	3.90	**4613 125.102**
100	32	4.15	44	53	160	60	32.100	132.100	3.70	**4613 132.100**
100	32	9.08	44	53	160	60	32.101	132.101	3.70	**4613 132.101**
100	32	16.62	44	53	160	60	32.102	132.102	3.70	**4613 132.102**

Product information

- to Gühring MQL standard
- for 2-channel-systems
- balancing quality: G6.3 / 15,000 rev./min
- incl. balancing thread 4xM6/6xM6
- for tool shank tolerance h6
- also available in the lengths
  l1 = 120 mm (concentricity 4 µm)
  and 160 mm (concentricity 5 µm)

Scope of delivery

- incl. MQL adjustment screw article no. 4621 and MQL coolant supply set article no. 4623
- special dimensions on request

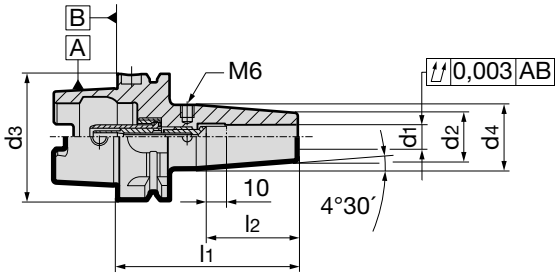

MQL 2 BY GÜHRING

HSK-A d_3	for shank Ø $d_{1\ h6}$ mm	A mm^2 (4:1)	d_2 mm	d_4 mm	l_1 mm	l_2 mm	incl. setting screw no. 4621 …	incl. cool. deliv. set 4623 …	kg	Article no. 4614 Order no.
32	6	2.01	21	25.5	80	36	6.032	12.032	0.30	**4614 6.032**
32	6	4.15	21	25.5	80	36	6.132	12.132	0.30	**4614 6.132**
32	8	2.01	21	25.5	80	36	8.032	12.032	0.30	**4614 8.032**
32	8	4.15	21	25.5	80	36	8.132	12.132	0.30	**4614 8.132**
32	10	2.01	24	31.7	85	40	10.032	12.032	0.30	**4614 10.032**
32	10	4.15	24	31.7	85	40	10.132	12.132	0.30	**4614 10.132**
32	12	2.01	24	32.3	90	45	12.032	12.032	0.30	**4614 12.032**
32	12	4.15	24	32.3	90	45	12.132	12.132	0.30	**4614 12.132**
40	6	2.01	21	27	80	36	6.040	16.040	0.40	**4614 6.040**
40	6	4.15	21	27	80	36	6.140	16.140	0.40	**4614 6.140**
40	8	2.01	21	27	80	36	8.040	16.040	0.40	**4614 8.040**
40	8	4.15	21	27	80	36	8.140	16.140	0.40	**4614 8.140**
40	10	2.01	24	32	80	40	10.040	16.040	0.50	**4614 10.040**
40	10	4.15	24	32	80	40	10.140	16.140	0.50	**4614 10.140**
40	12	2.01	24	32	90	45	12.040	16.040	0.50	**4614 12.040**
40	12	4.15	24	32	90	45	12.140	16.140	0.50	**4614 12.140**
40	12	9.08	24	32	90	45	12.240	16.240	0.50	**4614 12.240**
40	14	2.01	27	33.5	90	45	14.040	16.040	0.60	**4614 14.040**
40	14	4.15	27	33.5	90	45	14.140	16.140	0.60	**4614 14.140**
40	14	9.08	27	33.5	90	45	14.240	16.240	0.60	**4614 14.240**
40	16	2.01	27	33.5	90	48	16.040	16.040	0.50	**4614 16.040**
40	16	4.15	27	33.5	90	48	16.140	16.140	0.50	**4614 16.140**
40	16	9.08	27	33.5	90	48	16.240	16.240	0.50	**4614 16.240**
50	6	2.01	21	27	80	36	6.050	10.050	0.60	**4614 6.050**
50	6	4.15	21	27	80	36	6.150	10.150	0.60	**4614 6.150**
50	8	2.01	21	27	80	36	8.050	10.050	0.60	**4614 8.050**
50	8	4.15	21	27	80	36	8.150	10.150	0.60	**4614 8.150**
50	10	2.01	24	32	85	40	10.050	10.050	0.70	**4614 10.050**
50	10	4.15	24	32	85	40	10.150	10.150	0.70	**4614 10.150**
50	12	2.01	24	32	90	45	12.050	18.050	0.70	**4614 12.050**
50	12	4.15	24	32	90	45	12.150	20.050	0.70	**4614 12.150**
50	12	9.08	24	32	90	45	12.250	20.150	0.70	**4614 12.250**
50	14	2.01	27	34	90	45	14.050	18.050	0.70	**4614 14.050**
50	14	4.15	27	34	90	45	14.150	20.050	0.70	**4614 14.150**
50	14	9.08	27	34	90	45	14.250	20.150	0.70	**4614 14.250**
50	16	2.01	27	34	95	48	16.050	18.050	0.70	**4614 16.050**
50	16	4.15	27	34	95	48	16.150	20.050	0.70	**4614 16.150**
50	16	9.08	27	34	95	48	16.250	20.150	0.70	**4614 16.250**
50	18	2.01	33	41.5	95	48	18.050	18.050	0.90	**4614 18.050**
50	18	4.15	33	41.5	95	48	18.150	20.050	0.90	**4614 18.150**
50	18	9.08	33	41.5	95	48	18.250	20.150	0.90	**4614 18.250**
50	20	4.15	33	41.5	100	50	20.050	20.050	0.90	**4614 20.050**
50	20	9.08	33	41.5	100	50	20.150	20.150	0.90	**4614 20.150**
50	20	16.62	33	41.5	100	50	20.250	20.250	0.90	**4614 20.250**
63	6	2.01	21	27	80	36	6.100	10.063	0.70	**4614 6.063**
63	6	4.15	21	27	80	36	6.101	10.163	0.70	**4614 6.163**

HSK-A d_3	for shank Ø $d_{1\ h6}$ mm	4:1 A mm²	d_2 mm	d_4 mm	l_1 mm	l_2 mm	inch. setting screw no. 4621 …	incl. cool. deliv. set 4623 ...	kg	Article no. 4614 Order no.
63	8	2.01	21	27	80	36	8.100	10.063	0.70	**4614 8.063**
63	8	4.15	21	27	80	36	8.101	10.163	0.70	**4614 8.163**
63	10	2.01	24	32	85	40	10.100	10.063	0.70	**4614 10.063**
63	10	4.15	24	32	85	40	10.101	10.163	0.70	**4614 10.163**
63	12	2.01	24	32	90	45	12.100	18.063	0.80	**4614 12.063**
63	12	4.15	24	32	90	45	12.101	20.063	0.80	**4614 12.163**
63	12	9.08	24	32	90	45	12.102	20.163	0.80	**4614 12.263**
63	14	2.01	27	34	90	45	14.100	18.063	0.80	**4614 14.063**
63	14	4.15	27	34	90	45	14.101	20.063	0.80	**4614 14.163**
63	14	9.08	27	34	90	45	14.102	20.163	0.80	**4614 14.263**
63	16	2.01	27	34	95	48	16.100	18.063	0.90	**4614 16.063**
63	16	4.15	27	34	95	48	16.101	20.063	0.90	**4614 16.163**
63	16	9.08	27	34	95	48	16.102	20.163	0.90	**4614 16.263**
63	18	2.01	33	42	95	48	18.100	18.063	0.90	**4614 18.063**
63	18	4.15	33	42	95	48	18.101	20.063	0.90	**4614 18.163**
63	18	9.08	33	42	95	48	18.102	20.163	0.90	**4614 18.263**
63	20	4.15	33	42	100	50	20.100	20.063	1.00	**4614 20.063**
63	20	9.08	33	42	100	50	20.101	20.163	1.00	**4614 20.163**
63	20	16.62	33	42	100	50	20.102	20.263	1.00	**4614 20.263**
63	25	4.15	44	52.5	115	56	25.100	32.063	1.00	**4614 25.063**
63	25	9.08	44	52.5	115	56	25.101	32.163	1.00	**4614 25.163**
63	25	16.62	44	52.5	115	56	25.102	32.263	1.00	**4614 25.263**
63	32	4.15	44	52.5	120	60	32.100	32.063	1.10	**4614 32.063**
63	32	9.08	44	52.5	120	60	32.101	32.163	1.10	**4614 32.163**
63	32	16.62	44	52.5	120	60	32.102	32.263	1.10	**4614 32.263**
63	6	2.01	21	27	120	36	6.032	208.063	0.90	**4614 206.063**
63	6	4.15	21	27	120	36	6.132	208.163	0.90	**4614 206.163**
63	8	2.01	21	27	120	36	8.040	208.063	1.00	**4614 208.063**
63	8	4.15	21	27	120	36	8.140	208.163	1.00	**4614 208.163**
63	10	2.01	24	32	120	40	10.050	210.063	1.10	**4614 210.063**
63	10	4.15	24	32	120	40	10.150	210.063	1.10	**4614 210.163**
63	12	2.01	24	32	120	45	12.100	214.063	1.20	**4614 212.063**
63	12	4.15	24	32	120	45	12.101	214.163	1.20	**4614 212.163**
63	12	9.08	24	32	120	45	12.102	214.263	1.20	**4614 212.263**
63	14	2.01	27	34	120	45	14.100	214.063	1.20	**4614 214.063**
63	14	4.15	27	34	120	45	14.101	214.163	1.20	**4614 214.163**
63	14	9.08	27	34	120	45	14.102	214.263	1.20	**4614 214.263**
63	16	2.01	27	34	120	48	16.100	218.063	1.20	**4614 216.063**
63	16	4.15	27	34	120	48	16.101	218.163	1.20	**4614 216.163**
63	16	9.08	27	34	120	48	16.102	218.263	1.20	**4614 216.263**
63	18	2.01	33	42	120	48	18.100	218.063	1.40	**4614 218.063**
63	18	4.15	33	42	120	48	18.101	218.163	1.40	**4614 218.163**
63	18	9.08	33	42	120	48	18.102	218.263	1.40	**4614 218.263**
63	20	4.15	33	42	120	50	20.100	220.063	1.40	**4614 220.063**
63	20	9.08	33	42	120	50	20.101	220.163	1.40	**4614 220.163**
63	20	16.62	33	42	120	50	20.102	220.263	1.40	**4614 220.263**
63	6	2.01	21	27	160	36	6.032	108.063	0.80	**4614 106.063**
63	6	4.15	21	27	160	36	6.132	108.163	0.80	**4614 106.163**
63	8	2.01	21	27	160	36	8.040	108.063	0.80	**4614 108.063**
63	8	4.15	21	27	160	36	8.140	108.163	0.80	**4614 108.163**
63	10	2.01	24	32	160	40	10.050	110.063	0.90	**4614 110.063**
63	10	4.15	24	32	160	40	10.150	110.163	0.90	**4614 110.163**
63	12	2.01	24	32	160	45	12.100	114.063	0.90	**4614 112.063**
63	12	4.15	24	32	160	45	12.101	114.163	0.90	**4614 112.163**
63	12	9.08	24	32	160	45	12.102	114.263	0.90	**4614 112.263**
63	14	2.01	27	34	160	45	14.100	114.063	1.00	**4614 114.063**
63	14	4.15	27	34	160	45	14.101	114.163	1.00	**4614 114.163**
63	14	9.08	27	34	160	45	14.102	114.263	1.00	**4614 114.263**
63	16	2.01	27	34	160	48	16.100	118.063	1.00	**4614 116.063**
63	16	4.15	27	34	160	48	16.101	118.163	1.00	**4614 116.163**
63	16	9.08	27	34	160	48	16.102	118.263	1.00	**4614 116.263**
63	18	2.01	33	42	160	48	18.100	118.063	1.20	**4614 118.063**
63	18	4.15	33	42	160	48	18.101	118.163	1.20	**4614 118.163**
63	18	9.08	33	42	160	48	18.102	118.263	1.20	**4614 118.263**
63	20	4.15	33	42	160	50	20.100	120.063	1.20	**4614 120.063**
63	20	9.08	33	42	160	50	20.101	120.163	1.20	**4614 120.163**
63	20	16.62	33	42	160	50	20.102	120.263	1.20	**4614 120.263**
63	25	4.15	44	52.5	160	56	25.100	125.063	1.80	**4614 125.063**
63	25	9.08	44	52.5	160	56	25.101	125.163	1.80	**4614 125.163**

HSK-A d_3	for shank Ø d_1 h6 mm	4:1 A mm²	d_2 mm	d_4 mm	l_1 mm	l_2 mm	incl. setting screw no. 4621 …	incl. cool. deliv. set 4623 ...	kg	Article no. 4614 Order no.
63	25	16.62	44	52.5	160	56	25.102	125.263	1.80	**4614 125.263**
63	32	4.15	44	52.5	160	60	32.100	132.063	1.70	**4614 132.063**
63	32	9.08	44	52.5	160	60	32.101	132.163	1.70	**4614 132.163**
63	32	16.62	44	52.5	160	60	32.102	132.263	1.70	**4614 132.263**
80	6	2.01	21	27	85	36	6.100	10.080	1.30	**4614 6.080**
80	6	4.15	21	27	85	36	6.101	10.180	1.30	**4614 6.180**
80	8	2.01	21	27	85	36	8.100	10.080	1.30	**4614 8.080**
80	8	4.15	21	27	85	36	8.101	10.180	1.30	**4614 8.180**
80	10	2.01	24	32	90	40	10.100	10.080	1.40	**4614 10.080**
80	10	4.15	24	32	90	40	10.101	10.180	1.40	**4614 10.180**
80	12	2.01	24	32	95	45	12.100	18.080	1.40	**4614 12.080**
80	12	4.15	24	32	95	45	12.101	32.080	1.40	**4614 12.180**
80	12	9.08	24	32	95	45	12.102	32.180	1.40	**4614 12.280**
80	14	2.01	27	34	95	45	14.100	18.080	1.50	**4614 14.080**
80	14	4.15	27	34	95	45	14.101	32.080	1.50	**4614 14.180**
80	14	9.08	27	34	95	45	14.102	32.180	1.50	**4614 14.280**
80	16	2.01	27	34	100	48	16.100	18.080	1.50	**4614 16.080**
80	16	4.15	27	34	100	48	16.101	32.080	1.50	**4614 16.180**
80	16	9.08	27	34	100	48	16.102	32.180	1.50	**4614 16.280**
80	18	2.01	33	42	100	48	18.100	18.080	1.70	**4614 18.080**
80	18	4.15	33	42	100	48	18.101	32.080	1.70	**4614 18.180**
80	18	9.08	33	42	100	48	18.102	32.180	1.70	**4614 18.280**
80	20	4.15	33	42	105	50	20.100	32.080	1.70	**4614 20.080**
80	20	9.08	33	42	105	50	20.101	32.180	1.70	**4614 20.180**
80	20	16.62	33	42	105	50	20.102	32.280	1.70	**4614 20.280**
80	25	4.15	44	53	115	56	25.100	32.080	2.20	**4614 25.080**
80	25	9.08	44	53	115	56	25.101	32.180	2.20	**4614 25.180**
80	25	16.62	44	53	115	56	25.102	32.280	2.20	**4614 25.280**
80	32	4.15	44	53	120	60	32.100	32.080	2.10	**4614 32.080**
80	32	9.08	44	53	120	60	32.101	32.180	2.10	**4614 32.180**
80	32	16.62	44	53	120	60	32.102	32.280	2.10	**4614 32.280**
100	6	2.01	21	27	85	36	6.100	10.100	2.10	**4614 6.100**
100	6	4.15	21	27	85	36	6.101	10.101	2.10	**4614 6.101**
100	8	2.01	21	27	85	36	8.100	10.100	2.20	**4614 8.100**
100	8	4.15	21	27	85	36	8.101	10.101	2.20	**4614 8.101**
100	10	2.01	24	32	90	40	10.100	10.100	2.30	**4614 10.100**
100	10	4.15	24	32	90	40	10.101	10.101	2.30	**4614 10.101**
100	12	2.01	24	32	95	45	12.100	18.100	2.30	**4614 12.100**
100	12	4.15	24	32	95	45	12.101	32.100	2.30	**4614 12.101**
100	12	9.08	24	32	95	45	12.102	32.101	2.30	**4614 12.102**
100	14	2.01	27	34	95	45	14.100	18.100	2.30	**4614 14.100**
100	14	4.15	27	34	95	45	14.101	32.100	2.30	**4614 14.101**
100	14	9.08	27	34	95	45	14.102	32.101	2.30	**4614 14.102**
100	16	2.01	27	34	100	48	16.100	18.100	2.30	**4614 16.100**
100	16	4.15	27	34	100	48	16.101	32.100	2.30	**4614 16.101**
100	16	9.08	27	34	100	48	16.102	32.101	2.30	**4614 16.102**
100	18	2.01	33	42	100	48	18.100	18.100	2.50	**4614 18.100**
100	18	4.15	33	42	100	48	18.101	32.100	2.50	**4614 18.101**
100	18	9.08	33	42	100	48	18.102	32.101	2.50	**4614 18.102**
100	20	4.15	33	42	105	50	20.100	32.100	2.50	**4614 20.100**
100	20	9.08	33	42	105	50	20.101	32.101	2.50	**4614 20.101**
100	20	16.62	33	42	105	50	20.102	32.102	2.50	**4614 20.102**
100	25	4.15	44	53	115	56	25.100	32.100	3.00	**4614 25.100**
100	25	9.08	44	53	115	56	25.101	32.101	3.00	**4614 25.101**
100	25	16.62	44	53	115	56	25.102	32.102	3.00	**4614 25.102**
100	32	4.15	44	53	120	60	32.100	32.100	3.00	**4614 32.100**
100	32	9.08	44	53	120	60	32.101	32.101	3.00	**4614 32.101**
100	32	16.62	44	53	120	60	32.102	32.102	3.00	**4614 32.102**
100	6	2.01	21	27	160	36	6.032	108.100	2.60	**4614 106.100**
100	6	4.15	21	27	160	36	6.132	108.101	2.60	**4614 106.101**
100	8	2.01	21	27	160	36	8.040	108.100	2.50	**4614 108.100**
100	8	4.15	21	27	160	36	8.140	108.101	2.50	**4614 108.101**
100	10	2.01	24	32	160	40	10.050	110.100	2.70	**4614 110.100**
100	10	4.15	24	32	160	40	10.150	110.101	2.70	**4614 110.101**
100	12	2.01	24	32	160	45	12.100	114.100	2.70	**4614 112.100**
100	12	4.15	24	32	160	45	12.101	114.101	2.70	**4614 112.101**
100	12	9.08	24	32	160	45	12.102	114.102	2.70	**4614 112.102**
100	14	2.01	27	34	160	45	14.100	114.100	2.80	**4614 114.100**

										Article no.	4614
HSK-A d_3	for shank Ø $d_{1\ h6}$ mm	4:1 A mm^2	d_2 mm	d_4 mm	l_1 mm	l_2 mm	incl. setting screw no. 4621 …	incl. cool. deliv. set 4623 ...	kg		Order no.
100	14	4.15	27	34	160	45	14.101	114.101	2.80		**4614 114.101**
100	14	9.08	27	34	160	45	14.102	114.102	2.80		**4614 114.102**
100	16	2.01	27	34	160	48	16.100	118.100	2.80		**4614 116.100**
100	16	4.15	27	34	160	48	16.101	118.101	2.80		**4614 116.101**
100	16	9.08	27	34	160	48	16.102	118.102	2.80		**4614 116.102**
100	18	2.01	33	42	160	48	18.100	118.100	3.20		**4614 118.100**
100	18	4.15	33	42	160	48	18.101	118.101	3.20		**4614 118.101**
100	18	9.08	33	42	160	48	18.102	118.102	3.20		**4614 118.102**
100	20	4.15	33	42	160	50	20.100	120.100	3.10		**4614 120.100**
100	20	9.08	33	42	160	50	20.101	120.101	3.10		**4614 120.101**
100	20	16.62	33	42	160	50	20.102	120.102	3.10		**4614 120.102**
100	25	4.15	44	53	160	56	25.100	125.100	3.90		**4614 125.100**
100	25	9.08	44	53	160	56	25.101	125.101	3.90		**4614 125.101**
100	25	16.62	44	53	160	56	25.102	125.102	3.90		**4614 125.102**
100	32	4.15	44	53	160	60	32.100	132.100	3.70		**4614 132.100**
100	32	9.08	44	53	160	60	32.101	132.101	3.70		**4614 132.101**
100	32	16.62	44	53	160	60	32.102	132.102	3.70		**4614 132.102**

Product information

- to Gühring MQL standard
- for 2-channel-systems
- for the use of tool shanks to Gühring MQL standard
- black colour, corrosion protective coating to visually identify the 2-channel system

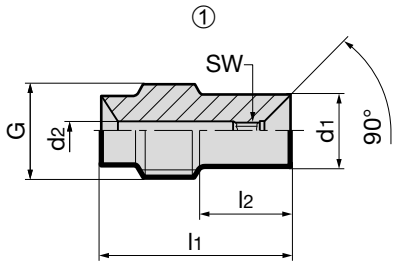

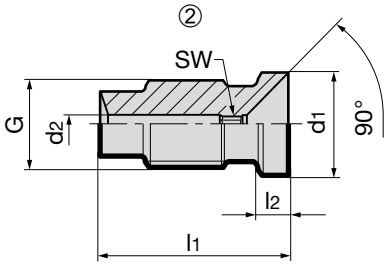

									Article no.	4621
HSK-A	holder Ø d_1 mm	4:1 for A mm^2	d_2 mm	l_1 mm	l_2 mm	G	SW	type		Order no.
32	6	2.01	2	25.8	2.5	M5x0.8	1.5	2		**4621 6.032**
32	6	4.15	2.9	25.8	2.5	M5x0.8	2	2		**4621 6.132**
32	8	2.01	2	21	3	M7x1	1.5	2		**4621 8.032**
32	8	4.15	2.9	21	3	M7x1	2	2		**4621 8.132**
32	10	2.01	2	22	3.5	M8x1	1.5	2		**4621 10.032**
32	10	4.15	2.9	22	3.5	M8x1	2	2		**4621 10.132**
32	12	2.01	2	22	3.5	M10x1	1.5	2		**4621 12.032**
32	12	4.15	2.9	22	3.5	M10x1	2	2		**4621 12.132**
40	6	2.01	2	26.5	11	M7x1	1.5	1		**4621 6.040**
40	6	4.15	2.9	26.5	11	M7x1	2	1		**4621 6.140**
40	8	2.01	2	26.5	3	M7x1	1.5	2		**4621 8.040**
40	8	4.15	2.9	26.5	3	M7x1	2	2		**4621 8.140**
40	10	2.01	2	22.2	3.5	M8x1	1.5	2		**4621 10.040**
40	10	4.15	2.9	22.2	3.5	M8x1	2	2		**4621 10.140**
40	12	2.01	2	26.5	3.5	M10x1	1.5	2		**4621 12.040**
40	12	4.15	2.9	26.5	3.5	M10x1	2	2		**4621 12.140**
40	12	9.08	4.1	26.5	3.5	M10x1	3	2		**4621 12.240**
40	14	2.01	2	26.5	4.5	M10x1	1.5	2		**4621 14.040**
40	14	4.15	2.9	26.5	4.5	M10x1	2	2		**4621 14.140**
40	14	9.08	4.1	26.5	4.5	M10x1	3	2		**4621 14.240**
40	16	2.01	2	23.5	5.5	M12x1	1.5	2		**4621 16.040**
40	16	4.15	2.9	23.5	5.5	M12x1	2	2		**4621 16.140**
40	16	9.08	4.1	23.5	5.5	M12x1	3	2		**4621 16.240**
50	6	2.01	2	22	10	M8x1	1.5	1		**4621 6.050**
50	6	4.15	2.9	22	10	M8x1	2	1		**4621 6.150**
50	8	2.01	2	22	3	M8x1	1.5	2		**4621 8.050**
50	8	4.15	2.9	22	3	M8x1	2	2		**4621 8.150**
50	10	2.01	2	23	3.5	M8x1	1.5	2		**4621 10.050**
50	10	4.15	2.9	23	3.5	M8x1	2	2		**4621 10.150**
50	12	2.01	2	23.7	3.5	M10x1	1.5	2		**4621 12.050**
50	12	4.15	2.9	23.7	3.5	M10x1	2	2		**4621 12.150**
50	12	9.08	4.1	23.7	3.5	M10x1	3	2		**4621 12.250**
50	14	2.01	2	23.7	4.5	M10x1	1.5	2		**4621 14.050**
50	14	4.15	2.9	23.7	4.5	M10x1	2	2		**4621 14.150**
50	14	9.08	4.1	23.7	4.5	M10x1	3	2		**4621 14.250**
50	16	2.01	2	25.7	5.5	M12x1	1.5	2		**4621 16.050**
50	16	4.15	2.9	25.7	5.5	M12x1	2	2		**4621 16.150**
50	16	9.08	4.1	25.7	5.5	M12x1	3	2		**4621 16.250**
50	18	2.01	2	25.7	6.5	M12x1	1.5	2		**4621 18.050**
50	18	4.15	2.9	25.7	6.5	M12x1	2	2		**4621 18.150**
50	18	9.08	4.1	25.7	6.5	M12x1	3	2		**4621 18.250**
50	20	4.15	2.9	27.5	6.5	M16x1	2	2		**4621 20.050**
50	20	9.08	4.1	27.5	6.5	M16x1	3	2		**4621 20.150**
50	20	16.62	5.4	27.5	6.5	M16x1	4	2		**4621 20.250**
63/80/100	6	2.01	2	20.5	10	M10x1	1.5	1		**4621 6.100**
63/80/100	6	4.15	2.9	20.5	10	M10x1	2	1		**4621 6.101**

									Article no.	4621
HSK-A	holder Ø d_1 mm	4:1 for A mm^2	d_2 mm	l_1 mm	l_2 mm	G	SW	type		Order no.
63/80/100	8	2.01	2	21.3	10	M10x1	1.5	1		**4621 8.100**
63/80/100	8	4.15	2.9	21.3	10	M10x1	2	1		**4621 8.101**
63/80/100	10	2.01	2	21.2	3.5	M10x1	1.5	2		**4621 10.100**
63/80/100	10	4.15	2.9	21.2	3.5	M10x1	2	2		**4621 10.101**
63/80/100	12	2.01	2	21.7	3.5	M10x1	1.5	2		**4621 12.100**
63/80/100	12	4.15	2.9	21.7	3.5	M10x1	2	2		**4621 12.101**
63/80/100	12	9.08	4.1	21.7	3.5	M10x1	3	2		**4621 12.102**
63/80/100	14	2.01	2	21.8	4.5	M10x1	1.5	2		**4621 14.100**
63/80/100	14	4.15	2.9	21.8	4.5	M10x1	2	2		**4621 14.101**
63/80/100	14	9.08	4.1	21.8	4.5	M10x1	3	2		**4621 14.102**
63/80/100	16	2.01	2	23.7	5.5	M12x1	1.5	2		**4621 16.100**
63/80/100	16	4.15	2.9	23.7	5.5	M12x1	2	2		**4621 16.101**
63/80/100	16	9.08	4.1	23.7	5.5	M12x1	3	2		**4621 16.102**
63/80/100	18	2.01	2	23.8	6.5	M12x1	1.5	2		**4621 18.100**
63/80/100	18	4.15	2.9	23.8	6.5	M12x1	2	2		**4621 18.101**
63/80/100	18	9.08	4.1	23.8	6.5	M12x1	3	2		**4621 18.102**
63/80/100	20	4.15	2.9	26.7	6.5	M16x1	2	2		**4621 20.100**
63/80/100	20	9.08	4.1	26.7	6.5	M16x1	3	2		**4621 20.101**
63/80/100	20	16.62	5.4	26.7	6.5	M16x1	4	2		**4621 20.102**
63/80/100	25	4.15	2.9	30.6	10	M16x1	2	2		**4621 25.100**
63/80/100	25	9.08	4.1	30.6	10	M16x1	3	2		**4621 25.101**
63/80/100	25	16.62	5.4	30.6	10	M16x1	4	2		**4621 25.102**
63/80/100	32	4.15	2.9	31.6	14	M16x1	2	2		**4621 32.100**
63/80/100	32	9.08	4.1	31.6	14	M16x1	3	2		**4621 32.101**
63/80/100	32	16.62	5.4	31.6	14	M16x1	4	2		**4621 32.102**

Product information

- for MQL tool holders (hydraulic chucks and shrink fit chucks) to company standard
- for 2-channel-systems
- for tool holders with manual tool change
- sealed thanks to bypass system

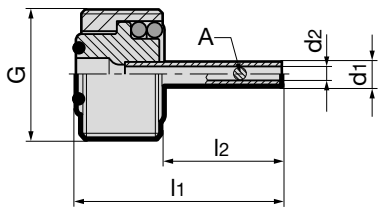

4:1

								Article no.	4622
for HSK-A	for clamp. Ø mm	A mm²	d_1 mm	d_2 mm	l_1 mm	l_2 mm	G	for chuck length	Order no.
32	6- 12	2.01	1.9	1.6	26,5	20	M10x1	Standard	4622 12.032
32	6- 12	4.15	2.8	2.3	26,5	20	M10x1	Standard	4622 12.132
40	6-16	2.01	1.9	1.6	22.8	14.5	M12x1	Standard	4622 16.040
40	6-16	4.15	2.8	2.3	22.8	14.5	M12x1	Standard	4622 16.140
40	12-16	9.08	4	3.4	22.6	14.3	M12x1	Standard	4622 16.240
50	6-10	2.01	1.9	1.6	26.3	16	M16x1.0	Standard	4622 10.050
50	6-10	4.15	2.8	2.3	26.3	16	M16x1.0	Standard	4622 10.150
50	12-18	2.01	1.9	1.6	24.2	13.9	M16x1.0	Standard	4622 18.050
50	12-20	4.15	2.8	2.3	24.2	13.9	M16x1.0	Standard	4622 20.050
50	12-20	9.08	4	3.4	24.2	13.9	M16x1.0	Standard	4622 20.150
50	20	16.62	5.3	4.6	24.2	13.9	M16x1.0	Standard	4622 20.250
63	6-10	2.01	1.9	1.6	26.4	14.1	M18x1.0	Standard	4622 10.063
63	6-10	4.15	2.8	2.3	26.4	14.1	M18x1.0	Standard	4622 10.163
63	12-18	2.01	1.9	1.6	25.3	13.0	M18x1.0	Standard	4622 18.063
63	12-20	4.15	2.8	2.3	25.3	13.0	M18x1.0	Standard	4622 20.063
63	12-20	9.08	4.0	3.4	25.3	13.0	M18x1.0	Standard	4622 20.163
63	20	16.62	5.3	4.6	26.5	14.2	M18x1.0	Standard	4622 20.263
63	25-32	4.15	2.8	2.3	30.6	18.3	M18x1.0	Standard	4622 32.063
63	25-32	9.08	4.0	3.4	30.6	18.3	M18x1.0	Standard	4622 32.163
63	25-32	16.62	5.3	4.6	30.6	18.3	M18x1.0	Standard	4622 32.263
63	6-8	2.01	1.9	1.6	66.4	54.1	M18x1.0	120	4622 208.063
63	6-8	4.15	2.8	2.3	66.4	54.1	M18x1.0	120	4622 208.163
63	10	2.01	1.9	1.6	61.4	49.1	M18x1.0	120	4622 210.063
63	10	4.15	2.8	2.3	61.4	49.1	M18x1.0	120	4622 210.163
63	12-14	2.01	1.9	1.6	55.3	43.0	M18x1.0	120	4622 214.063
63	12-14	4.15	2.8	2.3	55.3	43.0	M18x1.0	120	4622 214.163
63	12-14	9.08	4.0	3.4	55.3	43.0	M18x1.0	120	4622 214.263
63	16-18	2.01	1.9	1.6	50.3	38.0	M18x1.0	120	4622 218.063
63	16-18	4.15	2.8	2.3	50.3	38.0	M18x1.0	120	4622 218.163
63	16-18	9.08	4.0	3.4	50.3	38.0	M18x1.0	120	4622 218.263
63	20	4.15	2.8	2.3	46.5	34.2	M18x1.0	120	4622 220.063
63	20	9.08	4.0	3.4	46.5	34.2	M18x1.0	120	4622 220.163
63	20	16.62	5.3	4.6	46.5	34.2	M18x1.0	120	4622 220.263
63	6-8	2.01	1.9	1.6	106.4	94.1	M18x1.0	160	4622 108.063
63	6-8	4.15	2.8	2.3	106.4	94.1	M18x1.0	160	4622 108.163
63	10	2.01	1.9	1.6	101.4	89.1	M18x1.0	160	4622 110.063
63	10	4.15	2.8	2.3	101.4	89.1	M18x1.0	160	4622 110.163
63	12-14	2.01	1.9	1.6	95.3	83.0	M18x1.0	160	4622 114.063
63	12-14	4.15	2.8	2.3	95.3	83.0	M18x1.0	160	4622 114.163
63	12-14	9.08	4.0	3.4	95.3	83.0	M18x1.0	160	4622 114.263
63	16-18	2.01	1.9	1.6	90.3	78.0	M18x1.0	160	4622 118.063
63	16-18	4.15	2.8	2.3	90.3	78.0	M18x1.0	160	4622 118.163
63	16-18	9.08	4.0	3.4	90.3	78.0	M18x1.0	160	4622 118.263
63	20	4.15	2.8	2.3	86.5	74.2	M18x1.0	160	4622 120.063
63	20	9.08	4.0	3.4	86.5	74.2	M18x1.0	160	4622 120.163
63	20	16.62	5.3	4.6	86.5	74.2	M18x1.0	160	4622 120.263
63	25	4.15	2.8	2.3	75.6	63.3	M18x1.0	160	4622 125.063
63	25	9.08	4.0	3.4	75.6	63.3	M18x1.0	160	4622 125.163
63	25	16.62	5.3	4.6	75.6	63.3	M18x1.0	160	4622 125.263
63	32	4.15	2.8	2.3	70.6	58.3	M18x1.0	160	4622 132.063
63	32	9.08	4.0	3.4	70.6	58.3	M18x1.0	160	4622 132.163
63	32	16.62	5.3	4.6	70.6	58.3	M18x1.0	160	4622 132.263
80	6-10	2.01	1.9	1.6	29.0	14.6	M20x1.5	Standard	4622 10.080
80	6-10	4.15	2.8	2.3	29.0	14.6	M20x1.5	Standard	4622 10.180
80	12 -18	2.01	1.9	1.6	27.9	13.5	M20x1.5	Standard	4622 18.080
80	12 -32	4.15	2.8	2.3	27.9	13.5	M20x1.5	Standard	4622 32.080
80	12 -32	9.08	4.0	3.4	27.9	13.5	M20x1.5	Standard	4622 32.180
80	20-32	16.62	5.3	4.6	28.4	14.0	M20x1.5	Standard	4622 32.280

for HSK-A	for clamp. Ø mm	A mm²	d_1 mm	d_2 mm	l_1 mm	l_2 mm	G	for chuck length	Article no. 4622 Order no.
100	6-10	2.01	1.9	1.6	29.0	12.6	M24x1.5	Standard	**4622 10.100**
100	6-10	4.15	2.8	2.3	29.0	12.6	M24x1.5	Standard	**4622 10.101**
100	12-18	2.01	1.9	1.6	27.9	11.5	M24x1.5	Standard	**4622 18.100**
100	12-32	4.15	2.8	2.3	27.9	11.5	M24x1.5	Standard	**4622 32.100**
100	12-32	9.08	4.0	3.4	27.9	11.5	M24x1.5	Standard	**4622 32.101**
100	20-32	16.62	5.3	4.6	28.4	12.0	M24x1.5	Standard	**4622 32.102**
100	6-8	2.01	1.9	1.6	104.0	87.6	M24x1.5	160	**4622 108.100**
100	6-8	4.15	2.8	2.3	104.0	87.6	M24x1.5	160	**4622 108.101**
100	10	2.01	1.9	1.6	99.0	82.6	M24x1.5	160	**4622 110.100**
100	10	4.15	2.8	2.3	99.0	82.6	M24x1.5	160	**4622 110.101**
100	12-14	2.01	1.9	1.6	92.9	76.5	M24x1.5	160	**4622 114.100**
100	12-14	4.15	2.8	2.3	92.9	76.5	M24x1.5	160	**4622 114.101**
100	12-14	9.08	4.0	3.4	92.9	76.5	M24x1.5	160	**4622 114.102**
100	16-18	2.01	1.9	1.6	87.9	71.5	M24x1.5	160	**4622 118.100**
100	16-18	4.15	2.8	2.3	87.9	71.5	M24x1.5	160	**4622 118.101**
100	16-18	9.08	4.0	3.4	87.9	71.5	M24x1.5	160	**4622 118.102**
100	20	4.15	2.8	2.3	83.4	67.0	M24x1.5	160	**4622 120.100**
100	20	9.08	4.0	3.4	83.4	67.0	M24x1.5	160	**4622 120.101**
100	20	16.62	5.3	4.6	83.4	67.0	M24x1.5	160	**4622 120.102**
100	25	4.15	2.8	2.3	73.4	57.0	M24x1.5	160	**4622 125.100**
100	25	9.08	4.0	3.4	73.4	57.0	M24x1.5	160	**4622 125.101**
100	25	16.62	5.3	4.6	73.4	57.0	M24x1.5	160	**4622 125.102**
100	32	4.15	2.8	2.3	68.4	52.0	M24x1.5	160	**4622 132.100**
100	32	9.08	4.0	3.4	68.4	52.0	M24x1.5	160	**4622 132.101**
100	32	16.62	5.3	4.6	68.4	52.0	M24x1.5	160	**4622 132.102**

Installation of coolant supply set/MQL coolant supply unit

1. The HSK holder must be clean, free of swarf and undamaged.
2. Grease the O-rings prior to assembly.
3. Centrally insert the complete coolant supply set (coolant pipe, union nut and 2 O-rings) in the HSK with the assistance of the socket spanner.
   When inserting the MQL coolant supply unit, it is paramount to ensure that the MQL pipe is inserted centrally and undamaged into the MQL length setting screw (do not kink).
4. Screw in the coolant supply set/coolant supply unit and tighten (see table for torque figures)
5. Check coolant pipe for radial mobility.

Torque figures

for HSK	MA Nm
32	7
40	11
50	15
63	20
80	25
100	30

Installation of MQL 2 channel coolant supply set filler article no. 4622

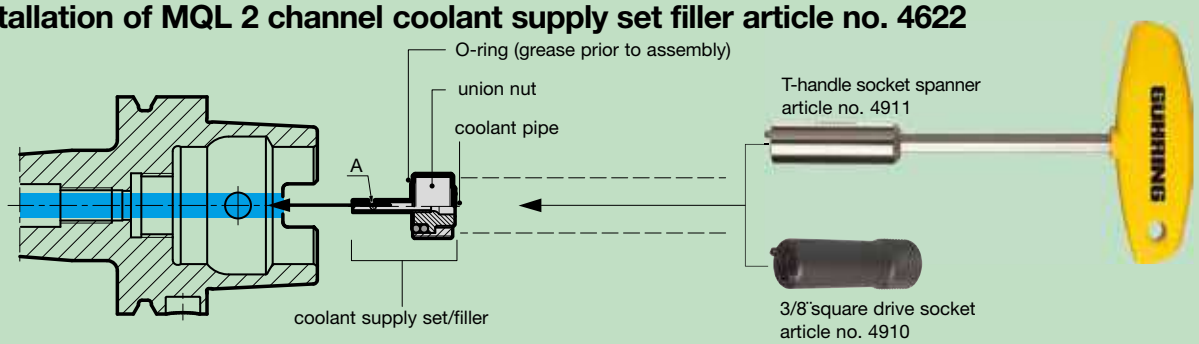

Installation of MQL 2 channel coolant supply set article no. 4623

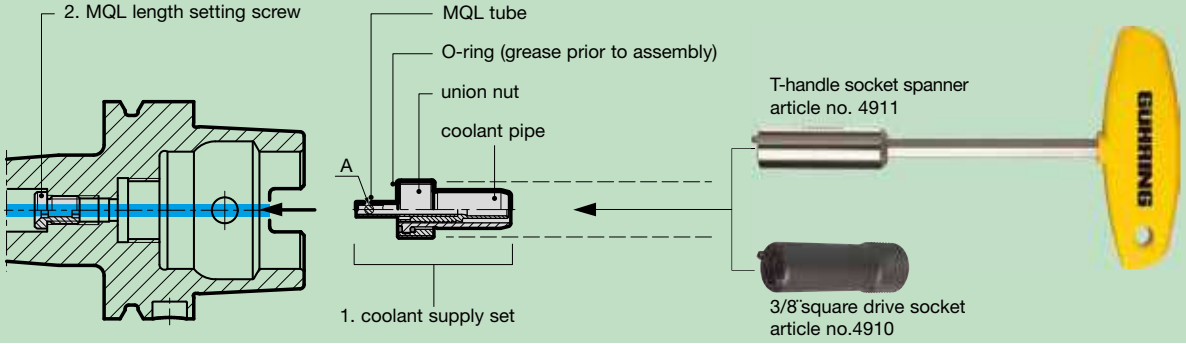

Product information

- for MQL tool holders (hydraulic chucks and shrink fit chucks) to company standard
- for 2-channel-systems
- for tool holders with automatic tool change
- sealed thanks to bypass system
- “Crashsafe” design similar to DIN 69090-2 supply collar
- all dimensions to DIN 69895 unless stated

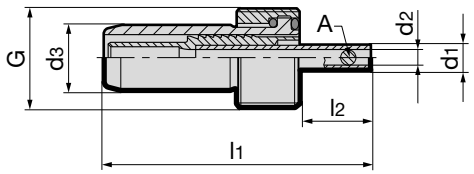

for HSK-A	for clamp. Ø mm	A mm² (4:1)	d_1 mm	d_2 mm	d_3 mm	l_1 mm	l_2 mm	G	for chuck length	Article no. 4623 Order no.
32	6- 12	2.01	1.9	1.6	6	47	20.6	M10x1	Standard	4623 12.032
32	6- 12	4.15	2.8	2.3	6	47	20.6	M10x1	Standard	4623 12.132
40	6-16	2.01	1.9	1.6	8	43.3	14.5	M12x1	Standard	4623 16.040
40	6-16	4.15	2.8	2.3	8	43.3	14.5	M12x1	Standard	4623 16.140
40	12-16	9.08	4.0	3.4	8	43.1	14.3	M12x1	Standard	4623 16.240
50	6-10	2.01	1.9	1.6	10	48.6	16.0	M16x1.0	Standard	4623 10.050
50	6-10	4.15	2.8	2.3	10	48.6	16.0	M16x1.0	Standard	4623 10.150
50	12-18	2.01	1.9	1.6	10	46.5	13.9	M16x1.0	Standard	4623 18.050
50	12-20	4.15	2.8	2.3	10	46.5	13.9	M16x1.0	Standard	4623 20.050
50	12-20	9.08	4.0	3.4	10	46.5	13.9	M16x1.0	Standard	4623 20.150
50	20	16.62	5.3	4.6	10	46.5	13.9	M16x1.0	Standard	4623 20.250
63	6-10	2.01	1.9	1.6	12	50.0	14.1	M18x1.0	Standard	4623 10.063
63	6-10	4.15	2.8	2.3	12	50.0	14.1	M18x1.0	Standard	4623 10.163
63	12-18	2.01	1.9	1.6	12	48.8	13.0	M18x1.0	Standard	4623 18.063
63	12-20	4.15	2.8	2.3	12	48.8	13.0	M18x1.0	Standard	4623 20.063
63	12-20	9.08	4.0	3.4	12	48.8	13.0	M18x1.0	Standard	4623 20.163
63	20	16.62	5.3	4.6	12	50.0	14.2	M18x1.0	Standard	4623 20.263
63	25-32	4.15	2.8	2.3	12	54.1	18.3	M18x1.0	Standard	4623 32.063
63	25-32	9.08	4.0	3.4	12	54.1	18.3	M18x1.0	Standard	4623 32.163
63	25-32	16.62	5.3	4.6	12	54.1	18.3	M18x1.0	Standard	4623 32.263
63	6-8	2.01	1.9	1.6	12	90.0	54.1	M18x1.0	120	4623 208.063
63	6-8	4.15	2.8	2.3	12	90.0	54.1	M18x1.0	120	4623 208.163
63	10	2.01	1.9	1.6	12	85.0	49.1	M18x1.0	120	4623 210.063
63	10	4.15	2.8	2.3	12	85.0	49.1	M18x1.0	120	4623 210.163
63	12-14	2.01	1.9	1.6	12	78.8	43.0	M18x1.0	120	4623 214.063
63	12-14	4.15	2.8	2.3	12	78.8	43.0	M18x1.0	120	4623 214.163
63	12-14	9.08	4.0	3.4	12	78.8	43.0	M18x1.0	120	4623 214.263
63	16-18	2.01	1.9	1.6	12	73.8	38.0	M18x1.0	120	4623 218.063
63	16-18	4.15	2.8	2.3	12	73.8	38.0	M18x1.0	120	4623 218.163
63	16-18	9.08	4.0	3.4	12	73.8	38.0	M18x1.0	120	4623 218.263
63	20	4.15	2.8	2.3	12	70.0	34.2	M18x1.0	120	4623 220.063
63	20	9.08	4.0	3.4	12	70.0	34.2	M18x1.0	120	4623 220.163
63	20	16.62	5.3	4.6	12	70.0	34.2	M18x1.0	120	4623 220.263
63	6-8	2.01	1.9	1.6	12	130.0	94.1	M18x1.0	160	4623 108.063
63	6-8	4.15	2.8	2.3	12	130.0	94.1	M18x1.0	160	4623 108.163
63	10	2.01	1.9	1.6	12	125.0	89.1	M18x1.0	160	4623 110.063
63	10	4.15	2.8	2.3	12	125.0	89.1	M18x1.0	160	4623 110.163
63	12-14	2.01	1.9	1.6	12	118.8	83.0	M18x1.0	160	4623 114.063
63	12-14	4.15	2.8	2.3	12	118.8	83.0	M18x1.0	160	4623 114.163
63	12-14	9.08	4.0	3.4	12	118.8	83.0	M18x1.0	160	4623 114.263
63	16-18	2.01	1.9	1.6	12	113.8	78.0	M18x1.0	160	4623 118.063
63	16-18	4.15	2.8	2.3	12	113.8	78.0	M18x1.0	160	4623 118.163
63	16-18	9.08	4.0	3.4	12	113.8	78.0	M18x1.0	160	4623 118.263
63	20	4.15	2.8	2.3	12	110.0	74.2	M18x1.0	160	4623 120.063
63	20	9.08	4.0	3.4	12	110.0	74.2	M18x1.0	160	4623 120.163
63	20	16.62	5.3	4.6	12	110.0	74.2	M18x1.0	160	4623 120.263
63	25	4.15	2.8	2.3	12	99.1	63.3	M18x1.0	160	4623 125.063
63	25	9.08	4	3.4	12	99.1	63.3	M18x1.0	160	4623 125.163
63	25	16.62	5.3	4.6	12	99.1	63.3	M18x1.0	160	4623 125.263
63	32	4.15	2.8	2.3	12	94.1	58.3	M18x1.0	160	4623 132.063

									Article no.	4623
for HSK-A	for clamp. Ø mm	A mm²	d_1 mm	d_2 mm	d_3 mm	l_1 mm	l_2 mm	G	for chuck length	Order no.
63	32	9.08	4.0	3.4	12	94.1	58.3	M18x1.0	160	**4623 132.163**
63	32	16.62	5.3	4.6	12	94.1	58.3	M18x1.0	160	**4623 132.263**
80	6-10	2.01	1.9	1.6	14	54.2	14.6	M20x1.5	Standard	**4623 10.080**
80	6-10	4.15	2.8	2.3	14	54.2	14.6	M20x1.5	Standard	**4623 10.180**
80	12 -18	2.01	1.9	1.6	14	53.1	13.5	M20x1.5	Standard	**4623 18.080**
80	12 -32	4.15	2.8	2.3	14	53.1	13.5	M20x1.5	Standard	**4623 32.080**
80	12 -32	9.08	4.0	3.4	14	53.1	13.5	M20x1.5	Standard	**4623 32.180**
80	20-32	16.62	5.3	4.6	14	53.6	14.0	M20x1.5	Standard	**4623 32.280**
100	6-10	2.01	1.9	1.6	14	56.2	12.6	M24x1.5	Standard	**4623 10.100**
100	6-10	4.15	2.8	2.3	14	56.2	12.6	M24x1.5	Standard	**4623 10.101**
100	12-18	2.01	1.9	1.6	14	55.1	11.5	M24x1.5	Standard	**4623 18.100**
100	12-32	4.15	2.8	2.3	14	55.1	11.5	M24x1.5	Standard	**4623 32.100**
100	12-32	9.08	4.0	3.4	14	55.1	11.5	M24x1.5	Standard	**4623 32.101**
100	20-32	16.62	5.3	4.6	14	55.6	12.0	M24x1.5	Standard	**4623 32.102**
100	6-8	2.01	1.9	1.6	12	131.2	87.6	M24x1.5	160	**4623 108.100**
100	6-8	4.15	2.8	2.3	12	131.2	87.6	M24x1.5	160	**4623 108.101**
100	10	2.01	1.9	1.6	12	126.2	82.6	M24x1.5	160	**4623 110.100**
100	10	4.15	2.8	2.3	12	126.2	82.6	M24x1.5	160	**4623 110.101**
100	12-14	2.01	1.9	1.6	12	120.1	76.5	M24x1.5	160	**4623 114.100**
100	12-14	4.15	2.8	2.3	12	120.1	76.5	M24x1.5	160	**4623 114.101**
100	12-14	9.08	4.0	3.4	12	120.1	76.5	M24x1.5	160	**4623 114.102**
100	16-18	2.01	1.9	1.6	12	115.1	71.5	M24x1.5	160	**4623 118.100**
100	16-18	4.15	2.8	2.3	12	115.1	71.5	M24x1.5	160	**4623 118.101**
100	16-18	9.08	4.0	3.4	12	115.1	71.5	M24x1.5	160	**4623 118.102**
100	20	4.15	2.8	2.3	12	110.6	67.0	M24x1.5	160	**4623 120.100**
100	20	9.08	4.0	3.4	12	110.6	67.0	M24x1.5	160	**4623 120.101**
100	20	16.62	5.3	4.6	12	110.6	67.0	M24x1.5	160	**4623 120.102**
100	25	4.15	2.8	2.3	12	100.6	57.0	M24x1.5	160	**4623 125.100**
100	25	9.08	4.0	3.4	12	100.6	57.0	M24x1.5	160	**4623 125.101**
100	25	16.62	5.3	4.6	12	100.6	57.0	M24x1.5	160	**4623 125.102**
100	32	4.15	2.8	2.3	12	95.6	52.0	M24x1.5	160	**4623 132.100**
100	32	9.08	4.0	3.4	12	95.6	52.0	M24x1.5	160	**4623 132.101**
100	32	16.62	5.3	4.6	12	95.6	52.0	M24x1.5	160	**4623 132.102**

Product information

- for MQL single and double channel systems
- MQL coolant pressure up to max. 16 bar
- compensates synchronisation errors
- guarantees high thread quality and optimal tool life
- minimal length compensation ± 0,3 mm in tension and compression direction balances very small pitch differences between synchro spindle and tap
- reduces an increase in axial forces during the cutting cycle to a minimum
- convenient hydraulic clamping using reduction bushes with active drive
- length-setting screw allows 3 mm readjustment
- Gühring MQL identifiable by green coloured ring

Scope of delivery

- incl. hexagon clamping key article no. 4912
- incl. MQL coolant supply set for manual tool change (filler) article no. 4513
- incl. adjustment key for MQL adjustment screws

- order MQL adjustment screw article no. 4305 separately
- order reduction bushes article no. 4605 or 4606 separately

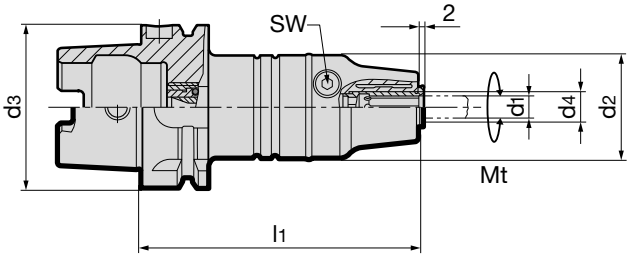

MQL 2-channel

1 MQL BY GÜHRING

2 MQL BY GÜHRING

GÜHROSync

									Article no.	4604
HSK-A d_3	d_4 mm	for shank-Ø d_1	for thread	d_2 mm	l_1 mm	Mt max. Nm	SW	kg		Order no.
63	12.00	2.8-10	M2-M12	40	106.5	26	4	1.5		**4604 12.063**
63	20.00	6-16	M4.5-M20	40	120.5	90	5	1.6		**4604 20.063**
100	12.00	2.8-10	M2-M12	40	113.0	26	4	2.8		**4604 12.100**
100	20.00	6-16	M4.5-M20	40	127.0	90	5	2.9		**4604 20.100**

Product information

- for MQL 2 channel systems
- MQL coolant pressure up to max. 16 bar
- compensates synchronisation errors
- guarantees high thread quality and optimal tool life
- minimal length compensation ± 0,3 mm in tension and compression direction balances very small pitch differences between synchro spindle and tap
- reduces an increase in axial forces during the cutting cycle to a minimum
- convenient hydraulic clamping using reduction bushes with active drive
- length-setting screw allows 3 mm readjustment
- Gühring MQL identifiable by green coloured ring

Scope of delivery

- incl. hexagon clamping key article no. 4912
- incl. MQL coolant supply set for automatic tool change article no. 4511
- incl. adjustment key for MQL adjustment screws

- order MQL adjustment screw article no. 4305 separately
- order reduction bushes article no. 4605 or 4606 separately

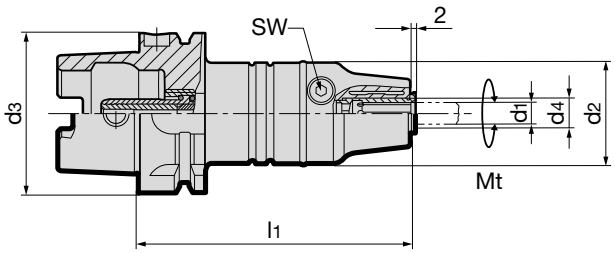

2 MQL BY GÜHRING

GÜHROSync

									Article no.	4603
HSK-A d_3	d_4 mm	for shank-Ø d_1	for thread	d_2 mm	l_1 mm	Mt max. Nm	SW	kg		Order no.
63	12.00	2.8-10	M2-M12	40	106.5	26	4	1.5		**4603 12.063**
63	20.00	6-16	M4.5-M20	40	120.5	90	5	1.6		**4603 20.063**
100	12.00	2.8-10	M2-M12	40	113.0	26	4	2.8		**4603 12.100**
100	20.00	6-16	M4.5-M20	40	127.0	90	5	2.9		**4603 20.100**

Product information

- for MQL single and double channel systems
- MQL coolant pressure up to max. 16 bar
- compensates synchronisation errors
- guarantees high thread quality and optimal tool life
- minimal length compensation ± 0,3 mm in tension and compression direction balances very small pitch differences between synchro spindle and tap
- reduces an increase in axial forces during the cutting cycle to a minimum
- convenient hydraulic clamping using reduction bushes with active drive
- length-setting screw allows 3 mm readjustment
- holder shank to DIN 1835-A or holding in precision chucks (hydraulic chucks or precision power chucks, shrink fit chucks for single application)
- Gühring MQL identifiable by green coloured ring

Scope of delivery

- incl. hexagon clamping key article no. 4912
- incl. adjustment key for MQL adjustment screws

- order MQL adjustment screw article no. 4305 separately
- order reduction bushes article no. 4605 or 4606 separately

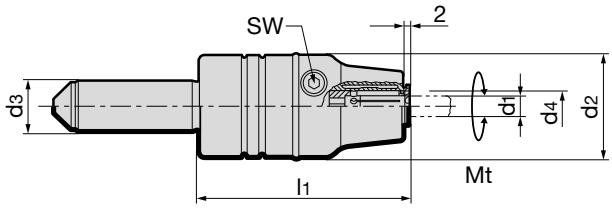

MQL 2-channel

									Article no.	4524
d_3 h6 mm	d_4 mm	for shank-Ø d_1	for thread	d_2 mm	l_1 mm	Mt max. Nm	SW	kg		Order no.
20	12,00	2,8-10	M2-M12	40	80	26	4	0,7		**4524 12.020**
20	20,00	6-16	M4,5-M20	40	94	90	5	0,8		**4524 20.020**

Product information

- for MQL single and double channel systems
- compensate synchronisation errors
- minimal length compensation ± 0,15 mm in tension and compression direction balances very small pitch differences between synchro spindle and tap, which can cause high frictional forces on the thread flanks and increase thread quality and tool life
- length-setting screw allows 2 to 3 mm readjustment
- MQL pressure up to max. 10 bar
- mounted MQL coolant supply pipe
- Gühring MQL identifiable by green coloured ring
- HSK-A to ISO 12164-1/DIN 69893-1

Scope of delivery

- incl. MQL coolant supply set article no. 4513 for manual tool change (filler)
- incl. sealed IC/ER clamping nut article no. 4306 (*see torque)
- incl. adjustment key for MQL adjustment screw

- order MQL adjustment screw article no. 4305 separately
- order sealing washer article no. 4335 separately
- order collet article no. 4308 separately
- order incl. clamping key article no. 4913 for ER retaining nut separately

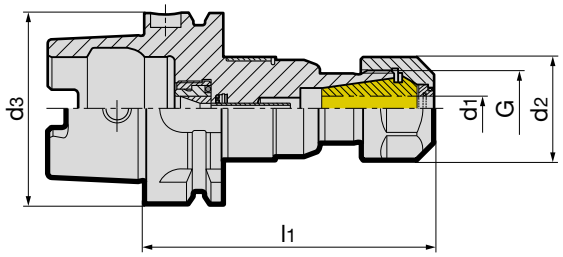

									Article no.	4298
HSK-A d_3	nom. size	for thread	G	d_1 mm	d_2 mm	l_1 mm	torque* Nm	kg		Order no.
63	ER20	M4-M14	M25x1.5	4.0-11,0	34	95.5	35	1.00		**4298 20.063**
63	ER32	M4-M30	M40x1.5	4.0-20,0	50	109.0	136	1.50		**4298 32.063**

Product information

- for 2-channel-systems
- compensate synchronisation errors
- minimal length compensation ± 0,15 mm in tension and compression direction balances very small pitch differences between synchro spindle and tap, which can cause high frictional forces on the thread flanks and increase thread quality and tool life
- length-setting screw allows 2 to 3 mm readjustment
- MQL pressure up to max. 10 bar
- mounted MQL coolant supply pipe
- Gühring MQL identifiable by green coloured ring
- HSK-A nach ISO 12164-1/DIN 69893-1

Scope of delivery

- incl. MQL coolant supply set article no. 4511 for automatic tool change
- incl. sealed IC/ER clamping nut article no. 4306 (*see torque)
- incl. adjustment key for MQL adjustment screw
- order MQL adjustment screw article no. 4305 separately
- order sealing washer article no. 4335 separately
- order collet article no. 4308 separately
- order clamping key article no. 4913 for ER retaining nut separately

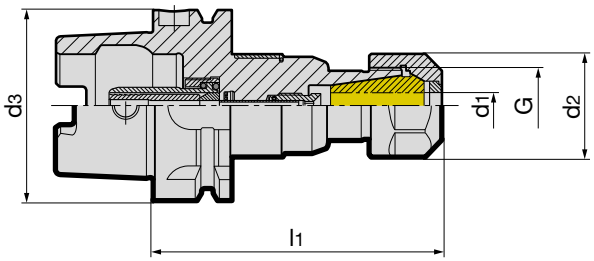

MQL 2-channel

Article no. 4341

HSK-A d_3	nom. size	for thread	G	d_1 mm	d_2 mm	l_1 mm	torque* Nm	kg	Order no.
63	ER20	M4-M14	M25x1.5	4.0-11.0	34	95.5	35	1.00	**4341 20.063**
63	ER32	M4-M30	M40x1.5	4.0-20.0	50	109.0	136	1.50	**4341 32.063**
100	ER20	M4-M14	M25x1.5	4.0-11.0	34	102.0	35	2.40	**4341 20.100**
100	ER32	M4-M30	M40x1.5	4.0-20.0	50	115.5	136	3.00	**4341 32.100**

MQL setting screws with internal cone for MQL synchro tapping chucks.

Product information

- MQL setting screws with internal cone
- for MQL single and double channel systems
- for MQL taps with external cone
- for MQL hydrosynchro tapping chucks article no. 4602, 4603 4604 und 4524
- for MQL synchro tapping chucks article no. 4298, 4330 und 4341
- position setting screw on tap shank
- length-setting screw allows 3 mm readjustment with hexagon chuck key article no. 4912, type „B“

Scope of delivery

- with O-ring for secure seal

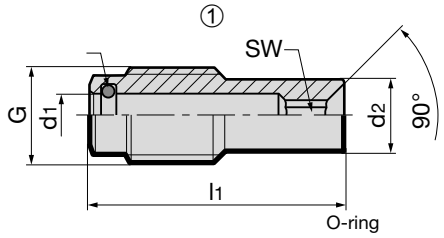

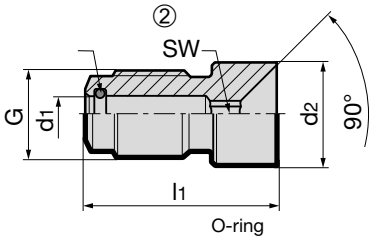

									Article no.	4305
for nom. size	for tap shank-Ø x □	G	d_1 mm	d_2 mm	l_1 mm	SW	O-ring	type		Order no.
ER20 / Hydro12	6x4.9	M8x1	3.6	4.8	24.15	2.5	3.5x1	1		**4305 6.020**
ER20 / Hydro12	7x5.5	M8x1	3.6	5.4	24.3	2.5	3.5x1	1		**4305 7.020**
ER20 / Hydro12	8x6.2	M8x1	3.6	6.1	19.3	2.5	3.5x1	1		**4305 8.020**
ER20 / Hydro12	9x7	M8x1	3.6	6.9	18.2	2.5	3.5x1	1		**4305 9.020**
ER20 / Hydro12	10x8	M8x1	3.6	7.8	14.65	2.5	3.5x1	2		**4305 10.020**
ER20 / Hydro12	11x9	M8x1	3.6	8.8	16.0	2.5	3.5x1	2		**4305 11.020**
ER32 / Hydro20	6x4.9	M10x1	4.1	4.8	34.5	3.0	4x1	1		**4305 6.032**
ER32 / Hydro20	7x5.5	M10x1	4.1	5.4	34.5	3.0	4x1	1		**4305 7.032**
ER32 / Hydro20	8x6.2	M10x1	4.1	6.1	29.5	3.0	4x1	1		**4305 8.032**
ER32 / Hydro20	9x7	M10x1	4.1	6.9	29.0	3.0	4x1	1		**4305 9.032**
ER32 / Hydro20	10x8	M10x1	4.1	7.8	25.0	3.0	4x1	1		**4305 10.032**
ER32 / Hydro20	11x9 & 12x9	M10x1	4.1	8.8	24.0	3.0	4x1	1		**4305 11.032**
ER32 / Hydro20	14x11	M10x1	4.1	10.8	22.5	3.0	4x1	2		**4305 14.032**
ER32 / Hydro20	16x12	M10x1	4.1	11.8	22.0	3.0	4x1	2		**4305 16.032**
ER32 / Hydro20	18x14.5 & 20x16	M10x1	4.1	14.3	20.5	3.0	4x1	2		**4305 18.032**

MQL coolant supply set for 2 channel systems HSK-A

Product information
- to MQL standard
- version sim. to DIN 69895
- for MQL 2-channel systems
- for tool holders with automatic tool clamping
- „Crashsafe“ version similar to DIN 69090-2 neck design
- dimensions d_2 and l_1 based on installed condition

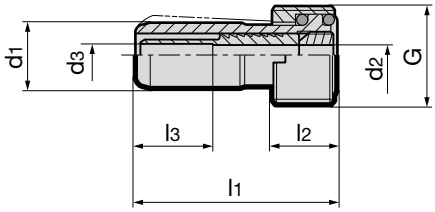

MQL 2 BY GÜHRING

	Article no.	4511

for HSK-A	d_1 mm	d_2 mm	d_3 mm	l_1 mm	l_2 mm	l_3 mm	G	Order no.
32	6.00	3.00	4.00	26.00	5.50	-	M10x1	**4511 10.032**
40	8.00	3.80	5.40	29.50	7.50	-	M12x1	**4511 12.040**
50	10.00	3.60	4.00	33.00	9.50	21.00	M16x1	**4511 16.050**
63	12.00	3.60	4.00	36.50	11.50	13.80	M18x1	**4511 18.063**
80	14.00	3.60	4.00	40.00	13.50	14.00	M20x1.5	**4511 20.080**
100	16.00	3.60	4.00	44.00	15.50	14.00	M24x1.5	**4511 24.100**

MQL coolant supply set HSK-A (filler)

Product information
- to MQL standard
- for internal cooling MQL 1 and 2 channel systems
- for tool holders with manual tool clamping
- optimally sealed for MQL clamping set
- dimensions d_2 and l_1 based on installed condition

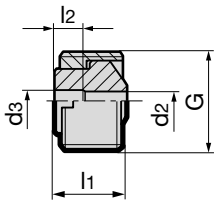

MQL 1 BY GÜHRING
MQL 2 BY GÜHRING

	Article no.	4513

for HSK-A	d_2 mm	d_3 mm	l_1 mm	l_2 mm	G	for MQL or IC	Order no.
32	3.00	3.00	6.30	-	M10x1	MQL-1C/2-C	**4513 10.032**
40	3.60	4.00	8.30	5.00	M12x1	MQL-1C/2-C	**4513 12.040**
50	3.60	4.00	10.30	5.00	M16x1	MQL-1C/2-C	**4513 16.050**
50	5.00	5.00	10.30	-	M16x1	IC	**4513 16.150**
63	3.60	4.00	12.30	5.00	M18x1	MQL-1C/2-C	**4513 18.063**
63	6.00	6.00	12.30	-	M18x1	IC	**4513 18.163**
80	3.60	4.00	14.40	5.00	M20x1.5	MQL-1C/2-C	**4513 20.080**
80	8.00	8.00	14.40	-	M20x1.5	IC	**4513 20.180**
100	3.60	4.00	16.40	5.00	M24x1.5	MQL-1C/2-C	**4513 24.100**
100	8.00	8.00	16.40	-	M24x1.5	IC	**4513 24.101**

4-POINT CLAMPING TECHNOLOGY FOR MQL

TECHNICAL INFORMATION AND ADVANTAGES

GÜHROCLAMP

MQL BY GÜHRING

Our 4-point clamping system is suitable for radial manual clamping. Primarily designed for installation in spindles (short drilling spindles. multiple-spindle drilling heads).

Advantages:

- simple and hence more economic spindle manufacture
- short. small diameter spindles with constricted spindle bearing spacing
- suitable for a pressure up to 160 bar (for conventional internal cooling)
- fast response time thanks to uninterupted MQL supply
- compatible installation contour and application of our 4-point clamping set for conventional cooling
- fixed installation through screwed joint, prebalanced, good rotation symmetry, therefore high-speed capability

GÜHROCLAMP MQL 4-point clamping sets for MQL and IC

Product information
- for radial manual HSK tool clamping
- universal application for MQL and high-pressure IC
- the central and coaxial MQL supply with constant internal diameter prevents coolant from consolidating to DIN 69090-2
- for a coolant pressure up to 160 bar
- for clamping HSK-A/C shanks to ISO 12164-1/DIN 69893

Scope of delivery
- complete as shown in illustration
- installation and operating instructions

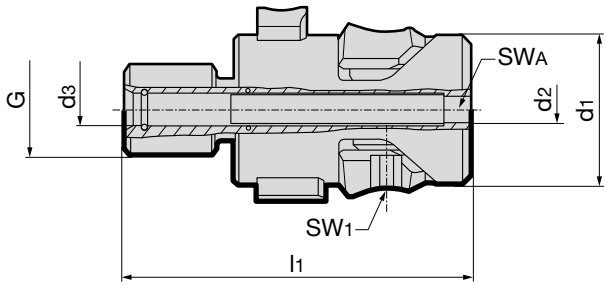

GÜHROCLAMP

MQL HSK clamping technology

	Article no.	4930

HSK-C	d_1 mm	d_2 mm	d_3 mm	l_1 mm	G	SW1	SW_A	kg	Order no.
32	16.7	3	4.1	41.75	M10	2.5	3	0.05	**4930 24.100**
40	20.6	4	5.1	43.90	M12	3	4	0.09	**4930 30.100**
50	25.5	5	7.1	54.20	M16	4	5	0.18	**4930 38.100**
50	25.5	5	6.1	54.20	M16	4	5	0.18	**4930 38.200**
63	33.0	6	7.1	72.20	M20	5	6	0.37	**4930 48.100**
80	41.0	8	10.1	90.20	M24	6	8	0.70	**4930 60.100**
100	52.0	10	12.1	107.10	M24	8	10	1.30	**4930 75.100**

GÜHROCLAMP component parts for MQL 4-point clamping sets article no. 4930

- retention screw only for adaptor
- if spindle cannot be locked. please use torque socket article no. 4963

GÜHROCLAMP

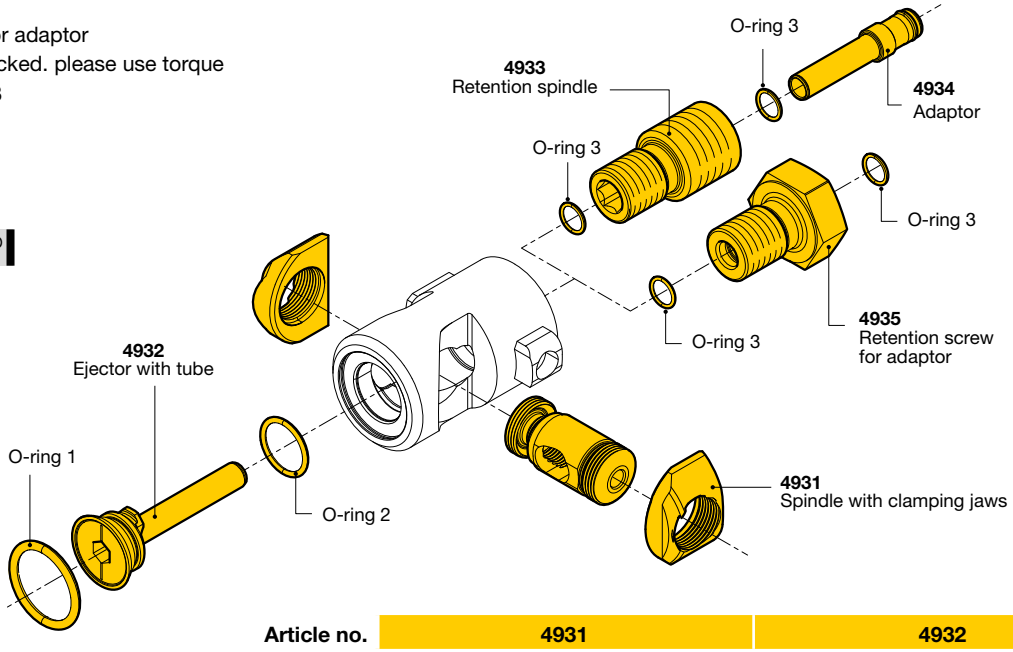

			Article no.	4931	4932
HSK-C	O-ring 1	O-ring 2	O-ring 3	Spindle with clamping jaws	Ejector with tube
	mm	mm	mm	Order no.	Order no.
32	10.5x2.0	6.0x1.5	3.5x1/4x1	**4931 24.000**	**4932 24.100**
40	13.0x2.0	7.0x1.5	4.5x1.0/5.0x1.0	**4931 30.000**	**4932 30.100**
50	16.0x2.0	10.0x1.5	5.5x1.0/7x1.0	**4931 38.000**	**4932 38.100**
63	20.3x2.4	14.0x1.5	7.0x1.0	**4931 48.000**	**4932 48.100**
80	23.4x3.53	16.0x2.0	10.0x1.5	**4931 60.000**	**4932 60.100**
100	28.17x3.53	22.0x2.0	12.0x1.70	**4931 75.000**	**4932 75.100**

Retention spindles for GÜHROCLAMP MQL 4-point clamping sets

Product information
- retention spindle for direct installation in spindle

Scope of delivery
- complete as shown in illustration

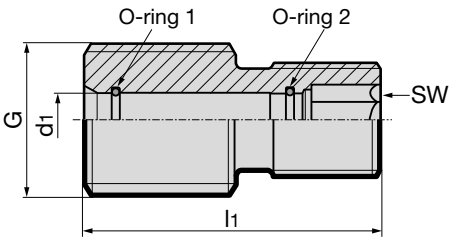

						Article no.	4933
for HSK-C	d_1 mm	l_1 mm	G	SW	O-ring 1	O-ring 2	**Order no.**
32	4.1	22.5	M10	4	3.5x1.0	4.0x1.0	**4933 24.100**
40	5.1	23.2	M 12	5	4.5x1.0	5.0x1.0	**4933 30.100**
50	7.1	27.0	M 16	6	5.5x1.0	7.0x1.0	**4933 38.100**
50	6.1	27.0	M 16	6	5.5x1.0	5.5x1.0	**4933 38.200**
63	7.1	39.0	M 20	8	7.0x1.0	7.0x1.0	**4933 48.100**
80	10.1	50.0	M 24	10	10.0x1.5	10.0x1.5	**4933 60.100**
100	12.1	60.0	M 24	12	12.0x1.70	12.0x1.70	**4933 75.100**

Adaptor for GÜHROCLAMP MQL 4-point clamping sets

Product information
- adaptor for direct installation in spindle and spindle adaptor (integrated) for coolant supply and sealing

Scope of delivery
- complete as shown in illustration

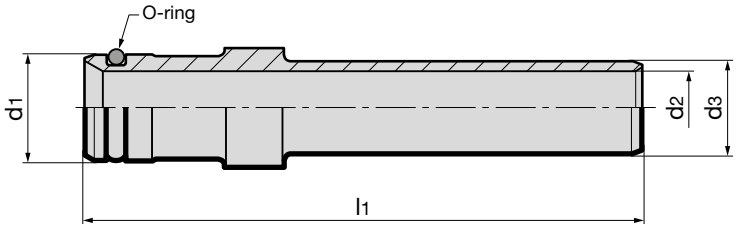

						Article no.	4934
for HSK-C	d_1 mm	d_2 mm	d_3 mm	l_1 mm	O-ring		**Order no.**
32	4.0	2.0	4.0	14	2.0 x 1.0		**4934 24.100**
40	5.0	3.0	5.0	28	3.0 x1.0		**4934 30.100**
50	6.0	4.0	6.0	28	4.0 x 1.0		**4934 38.200**
50	6.0	4.0	7.0	28	4.0 x 1.0		**4934 38.100**
63	8.0	5.5	7.0	42	6.0 x 1.0		**4934 48.100**
80	10.2	7.5	10.0	56	8.0 x 1.0		**4934 60.100**
100	12.0	9.5	12.0	60	10.0 x 1.0		**4934 75.100**

Retention screw for GÜHROCLAMP MQL 4-point clamping sets

Product information
- necessary for installation of MQL 4-point clamping set in spindle adaptors and module adaptor flange article no. 4363, 4386, 4387 and 4713
- change against standard retention bolt

Scope of delivery
- complete as shown in illustration

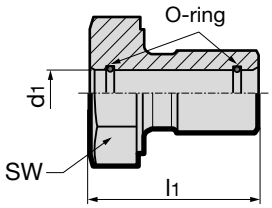

						Article no.	4935
for HSK-C	d_1 mm	l_1 mm	SW	O-ring 1	O-ring 2	torque Nm	**Order no.**
32	4.1	23.5	13	4x1.0	4x1.0	14	**4935 24.100**
40	5.1	21	16	4.5x1.0	5x1.0	30	**4935 30.100**
50	6.1	25	18	5.5x1.0	6x1.0	60	**4935 38.200**
50	7.1	25	18	5.5x1.0	7x1.0	60	**4935 38.100**
63	7.1	29	24	7x1.0	7x1.0	110	**4935 48.100**
80	10.1	36	24	10x1.5	10x1.5	180	**4935 60.100**
100	12.1	46.5	32	12x1.7	12x1.7	200	**4935 75.100**

M contour clamping sets for MQL and IC

Product information
- HSK clamping sets compatible with M contour spindles and adaptors
- universal application for MQL and high-pressure IC
- the central coaxial MQL supply with constant internal diameter ensures a uninterupted coolant supply to DIN 69090-2
- for a coolant pressure up to 160 bar
- for radial manual HSK tool clamping
- for clamping HSK-A/C shanks to ISO 12164-1/DIN 69893

Scope of delivery
- incl. adaptor with through hole for uninterupted coolant supply
- including installation and operating instructions
- order adaptor with spigot connection article no. 4616 separately
- spindle connection dimensions on request

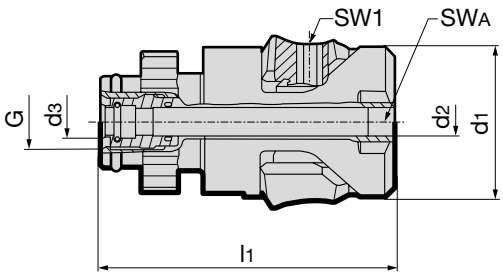

							Article no.	4615
HSK-C	d_1 mm	d_2 mm	d_3 mm	l_1 mm	G	SW1	SW_A	**Order no.**
32	16.7	3.0	4.1	43.4	M8x1	2.5	3	**4615 24.000**
40	20.6	4.0	5.1	48.3	M10x1	3	4	**4615 30.000**
50	25.5	5.0	6.1	55.3	M12x1	4	5	**4615 38.100**
50	25.5	5.0	7.1	55.3	M12x1	4	5	**4615 38.000**
63	33.0	6.0	7.1	64.7	M12x1	5	6	**4615 48.000**
80	41.0	8.0	10.1	75.3	M16x1	6	8	**4615 60.000**
100	52.0	10.0	12.1	94.5	M18x1	8	10	**4615 75.000**

Adaptor with spigot transition for M contour clamping set

Product information

- application on M contour clamping sets article no. 4615 instead of adaptor with coolant transfer hole
- universal application for MQL and high-pressure IC
- for a coolant pressure up to 160 bar
- adaptor for spindles without coolant tube for uninterupted coolant supply

- spindle connection dimensions on request

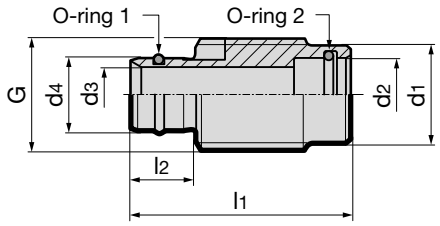

										Article no.	4616
for HSK-C	d_1 mm	d_2 mm	d_3 mm	d_4 mm	l_1 mm	l_2 mm	O-ring 1	O-ring 2	G		Order no.
32	-	3.5	3	5.00	14.4	5.4	3.5x1	3x1	M8x1		**4616 24.000**
40	7.7	4.5	4	6.00	22.0	6.5	4.0x1	4x1	M10x1		**4616 30.000**
50	8.5	5.5	5	8.00	23.0	7.5	5.5x1	6x1	M12x1		**4616 38.000**
63	10.6	7.0	6	8.00	24.0	7.0	7.0x1	6x1	M12x1		**4616 48.000**
80	-	10.0	8	11.30	23.3	8.3	10x1.5	8x1.5	M12x1		**4616 60.000**
100	-	12.0	10	13.80	30.6	9.6	12x1.5	12x1.5	M18x1		**4616 75.000**

Tool for the assembly / disassembly of M contour clamping sets

Product information

- for the assembly and disassembly of M contour clamping sets article no. 4615

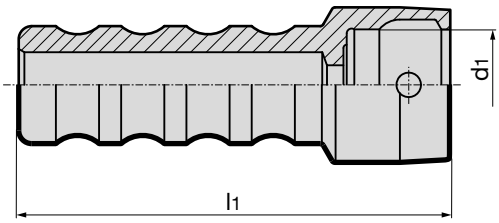

			Article no.	4624
for HSK	d_1 mm	l_1 mm		Order no.
32	17	118.7		**4624 32.000**
40	21	121.6		**4624 40.000**
50	26	127.5		**4624 50.000**
63	34	132		**4624 63.000**
80	42	143		**4624 80.000**
100	53	152		**4624 100.000**

Product information

- for assembly and disassembly of ejectors of MQL clamping sets, article no. 4930, and M contour clamping sets, article no. 4615

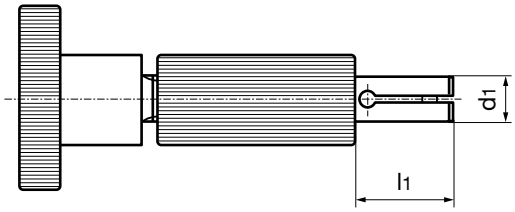

			Article no.	4986
for HSK	d_1 mm	l_1 mm		Order no.
32	3	9		**4986 3.032**
40	4	9		**4986 4.040**
50	5	11		**4986 5.050**
63	6	12		**4986 6.063**
80	8	15		**4986 8.080**
100	10	15		**4986 10.100**

Assembly instructions

1

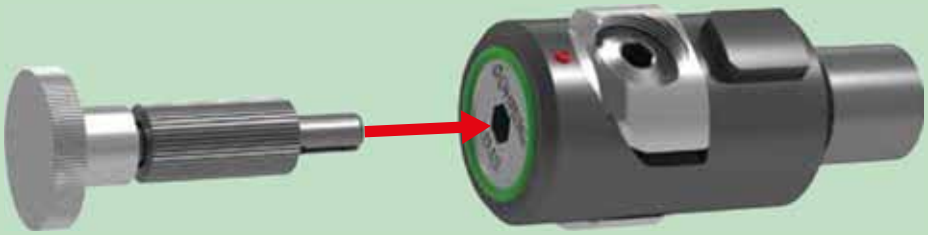

2

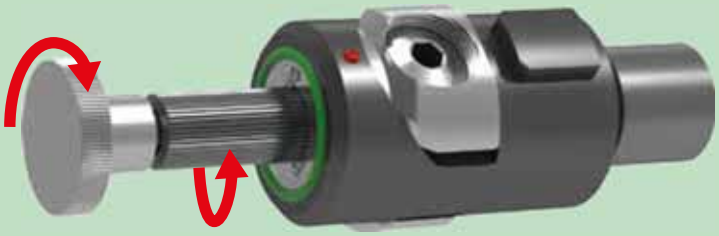

3

MQL-CHECK 3001

NEW GENERATION

Measurement directly at tool tip

In particular with minimum quantity lubrication it is very essential that very little quantities of lubrication are perfectly applied on the tool's cutting edge.
Deficient supply or long response times may have fatal consequences, which are premature wear, lower processing quality or even tool breakages. If the quantity of lubrication is too high, this may lead to a cost-intensive and needless lubricant consumption and extra cleaning effort on components or/and machines.
The MQL Check 3001 is a measuring device provided by Gühring which is easy in operation and which allows fast and reliable checking of the lubrication quantity directly at the tool's tip.

The MQL Check 3001 is fastened inside the machine via magnet points before the zero point of the plunging depth is determined via the tool's tip. After the tool has been positioned in the measuring device and the start command has been transmitted via the software, MQL supply can be started. The measuring device sends the collected data to the respective software on PC/laptop via bluetooth.

Advantages of MQL-Check 3001

- simple, quick measurements of the coolant volume directly at the tool point
- reproduceable and at any time comparable measuring data
- it also comes with a master tool for cross-checking the MQL test stand ➞ in order to check the function of the MQL device, machine, spindle, tool holder and tool
- a workshop suitable system, wireless operation - in terms of power supply as well as data transfer

Note:
Only tools with axial coolant duct exits can be checked by means of the MQL Check 3001

Technical Data

Measuring range	10 to 160 ml/h
Tool diameter range	3 to 21.5 mm
Measuring position	0 to 90° (vertical and horizontal machining)
Radio range	approx. 50 m (at optimal conditions)

MQL-Check 3001 consists of:

- Measuring device incl. bluetooth sender and magnet foot for fastening during horizontal processing
- Software for measured data logging
- 10 measuring filter
- Battery + power pack

Introduction

Alongside the machine and tooling the costs for coolant are a considerable portion of the overall cost of the machining process. Therefore, a reduction in the cooling lubrication requirements offers a potential for cost savings.

The reduction of cooling lubricants is not only cost saving but is also of benefit to the environment and health protection. Gühring is one of the pioneers in the research and development of MQL that began in the mid 1990's.

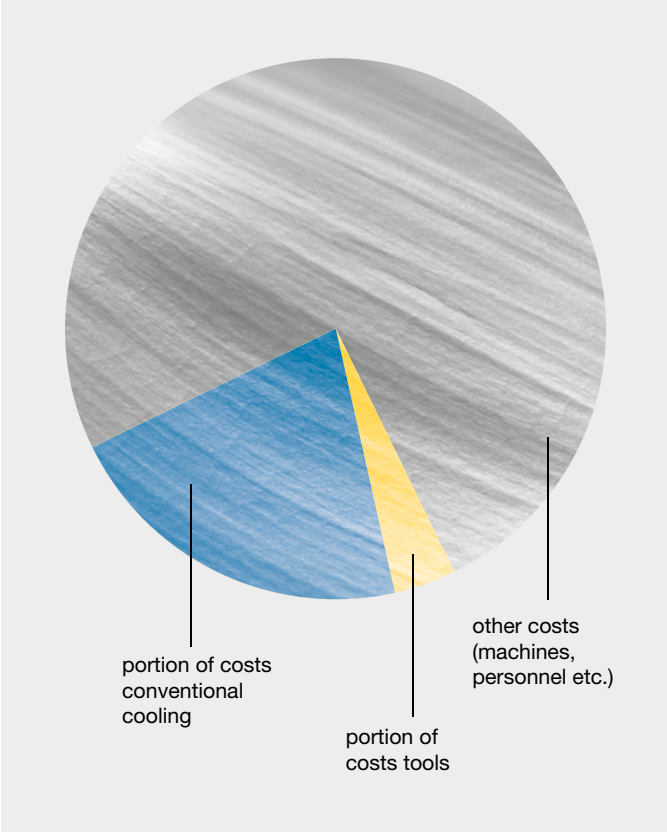

The aim of MQL machining

The acquisition of a new MQL cooling lubricant system is significantly less expensive than conventional cooling!

- reduction of thermal stresses at the tool point
- less tool wear
- effective chip evacuation from deep holes
- reduction of cooling lubricant requirement
- high cooling and lubrication effect especially in deep holes
- lowering the resulting costs such as:
  - component cleaning costs
  - cooling lubricant disposal costs
  - swarf disposal costs
- environment and health protection

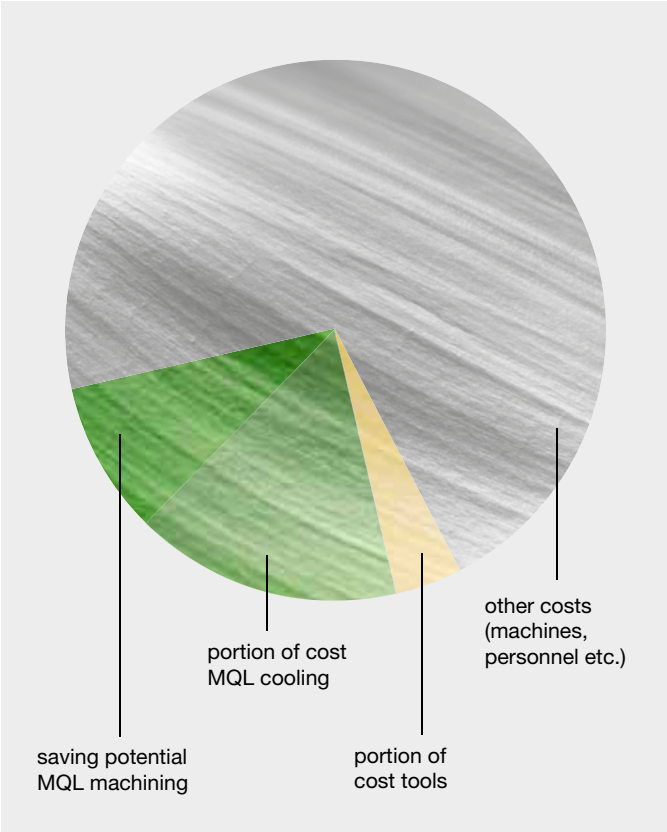

The development of present-day MQL systems

Thanks to the research in MQL machining Gühring created the pre-condition for a practical MQL technology. From the clamping set to the tool's cutting edge all the components were integrated in the development – the result was the first MQL supply system.

Features:
- modular constructed and standardised system
- MQL and conventional clamping set are freely interchangeable thanks to an identical spindle contour
- hydraulic, shrink fit and synchro chucks are all designed for the MQL clamping set

Gühring's current MQL system

By incorporating the MQL length adjustment screw to Gühring's first MQL supply system in 2007, the original drawback was eliminated. There is, therefore, currently a MQL supply system available to the customer that optimally meets the requirements of the present-day production process.

Features of the first Gühring MQL supply system:
- no lubricant delays
- special MQL coolant supply unit
- MQL suitable tool shank end
- tapered length setting screw

The user, therefore, benefits from a standardised system and a clearly reduced stock keeping thanks to compatible components.

Optimally formed shank end!
For a secure MQL supply

The supply of these extremely low coolant quantities directly to the effective area is of utmost importance. Hereby, the geometric design of the shank end plays a significant role! The Gühring developed conical shank end optimally satisfies the relevant MQL conditions.

Advantages of the tapered shank end:
- no lubricant delays
- minimal dead area
- simple operation
- cost-efficient production

Flow pattern with low vortex formation

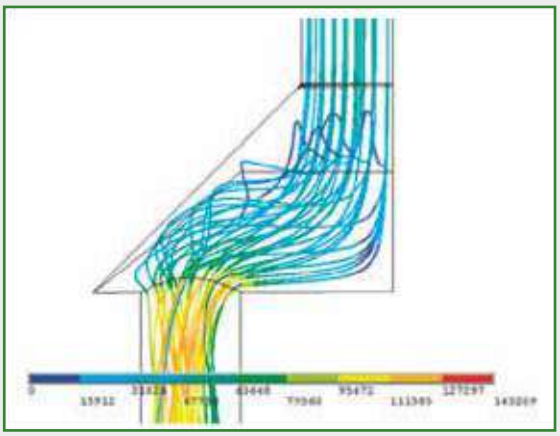

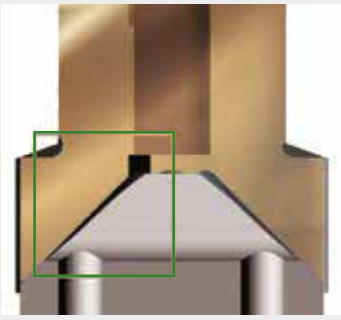

Flow conditions in the coolant duct connection slot at the point of the tapered transition

Keeping a cool point

With MQL the process temperature can be considerably reduced in comparison to dry machining resulting in longer tool life and an increased process reliability.

Thermographic examination at Gühring: Comparison of tool temperatures

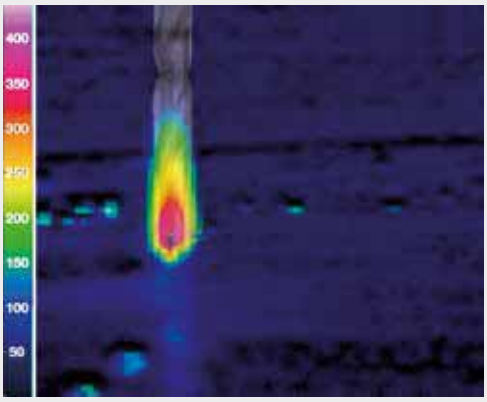

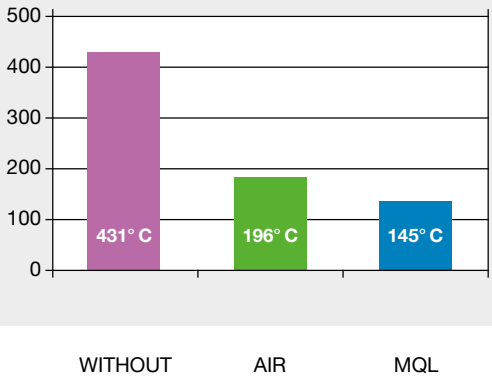

The best form for MQL!

Optimal MQL machining results thanks to the optimised tool geometry of RT 100 T!

1. Flute cross section:
The flute geometry of Gühring MQL tools ensures short chips that are optimally evacuated from deep holes.

2. Maximum coolant duct cross-section:
The cooling lubricant supply as well as the chip evacuation have been optimised through the tool' maximum coolant duct cross-section.

Flow speed comparison

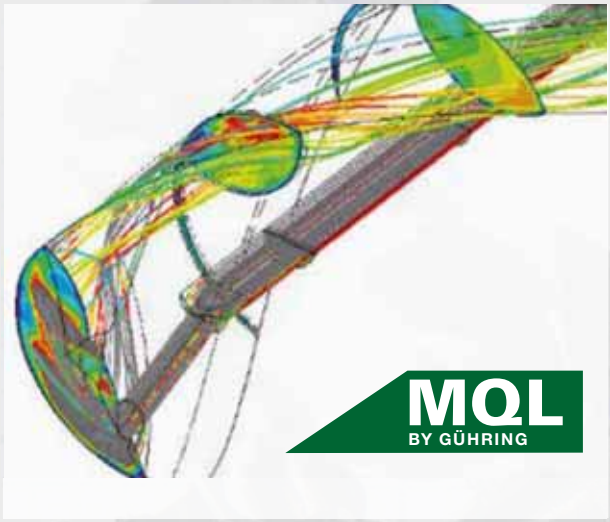

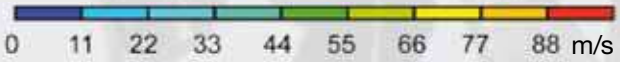

The flow speed
in the flute with MQL is 30.4 m/s.

The volume with MQL
is 6.960 l/h (std.litres air/h).

Tool Ø = 11.7 mm
Pressure at pump = 6 bar
Pressure at tool = 4 bar

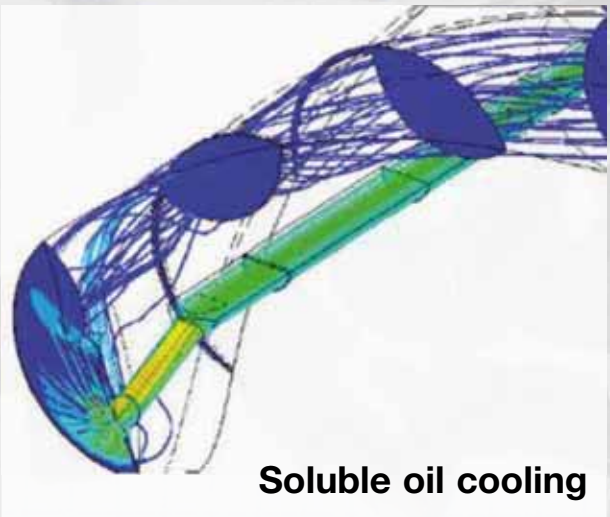

The flow speed
In the flute with soluble oil is 3.5 m/s.

The volume with soluble oil
is 600 l/h (std.litres air/h).

Tool Ø = 11.7 mm
Pressure at pump = 60 bar
Pressure at tool = 31 bar

MQL system types

The provision of the MQL medium to the tool can be achieved in two ways: the aerosol mixture can be prepared outside the machine and conveyed to the machining location (1-channel system) or compressed air and MQL medium are conveyed separately to the mixing chamber where they are then mixed together (2-channel system). The aerosol feed to the machining location is achieved via a suitable minimal quantity lubrication rotary adaptor (preferably with axial flowthrough), the spindle, the clamping system and finally the cutting tool. Unavoidable cross-section modifications should be as streamlined as possible.

1-channel MQL system

With a 1-channel MQL system, a lubricating aerosol is created in a separate MQL unit attached to the machine tool. Special nozzle systems inside a pressurised container create a lubricating aerosol via a regulated compressed air feed, its neat oil content adjustable and then maintained within the physical limits by the MQL control.

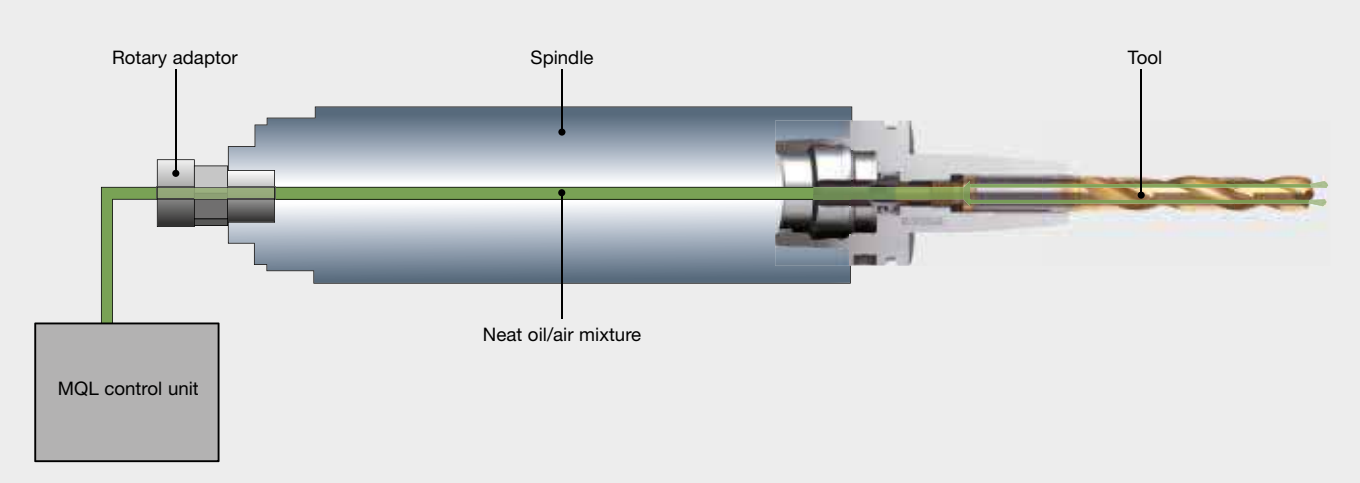

The 2-channel MQL system

With a 2-channel system the neat oil reaches the rotary adaptor from the unit via a ring line and a as short as possible stub line. In it is incorporated a quick valve that regulates minute quantities of neat oil. The neat oil is transported into the tool holder via a lance attached in the spindle. The second channel of the rotary adaptor is used for the air supply to the tool holder. Only at this point the air is mixed with the neat oil. To achieve this, the tool holder possesses a pressed-in pipe nozzle in which the mixing chamber is located. Neat oil and air can be mixed with this system in more or less any quantities. The route from the mixing chamber to the point of destination is only minimal resulting in a rapid response time and allowing a very quick alteration of the volume of neat oil.

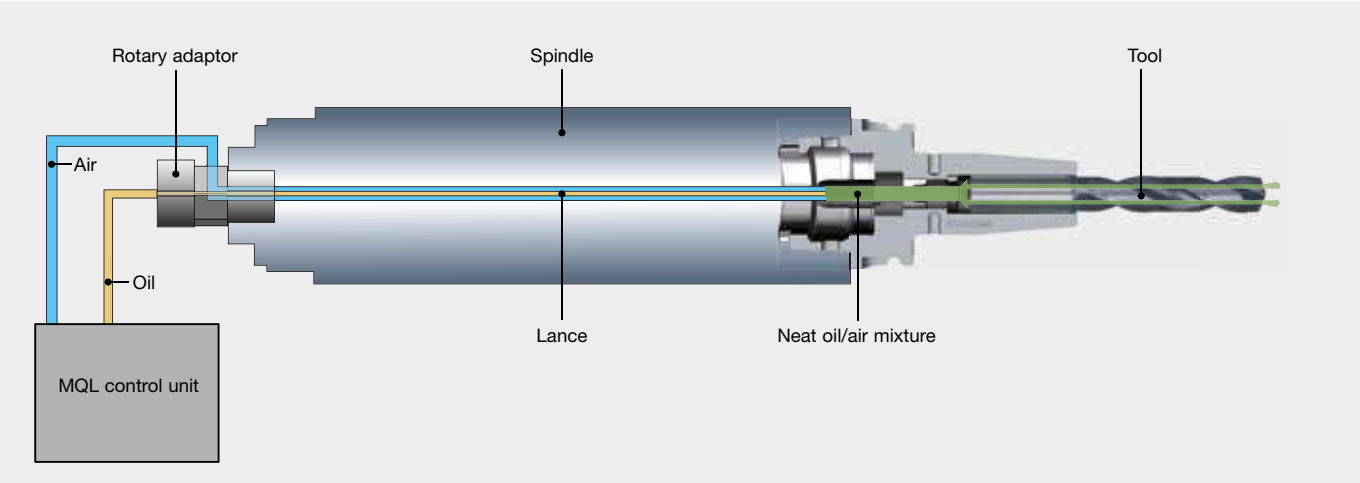

INSTALLATION INSTRUCTIONS

1. The HSK holder must be clean, free of swarf and undamaged.
2. Grease the O-rings prior to assembly.
3. Centrally insert the complete coolant supply set (coolant pipe, union nut and 2 O-rings) in the HSK with the assistance of the socket spanner. When inserting the MQL coolant supply unit, it is paramount to ensure that the MQL pipe is inserted centrally and undamaged into the MQL length setting screw (do not kink).
4. Screw in the coolant supply set/coolant supply unit and tighten (see table for torque figures)
5. Check coolant pipe for radial mobility.

Torque figures

for HSK	MA Nm
32	7
40	11
50	15
63	20
80	25
100	30

Installation of MQL coolant supply set article no. 4939

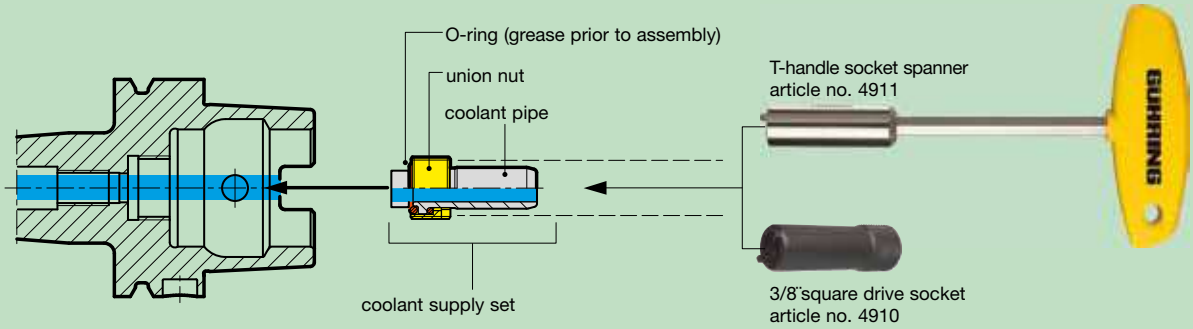

Installation of MQL coolant supply set filler article no. 4940

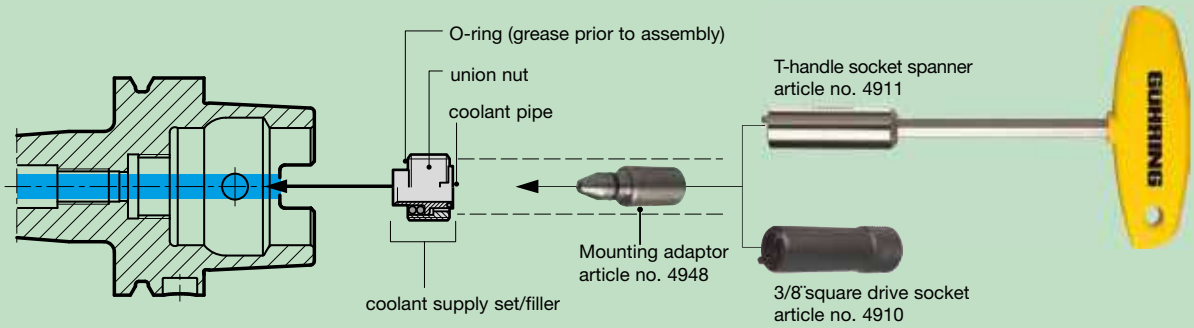

Installation of MQL coolant supply unit article no. 4623/4924

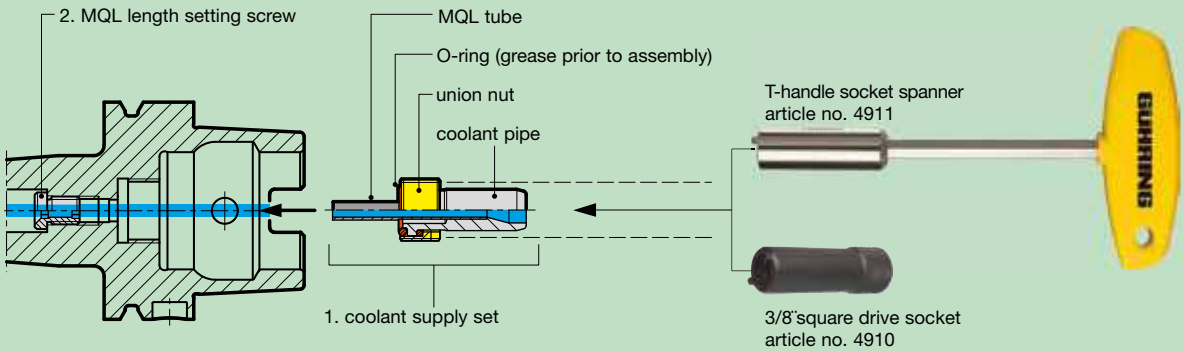

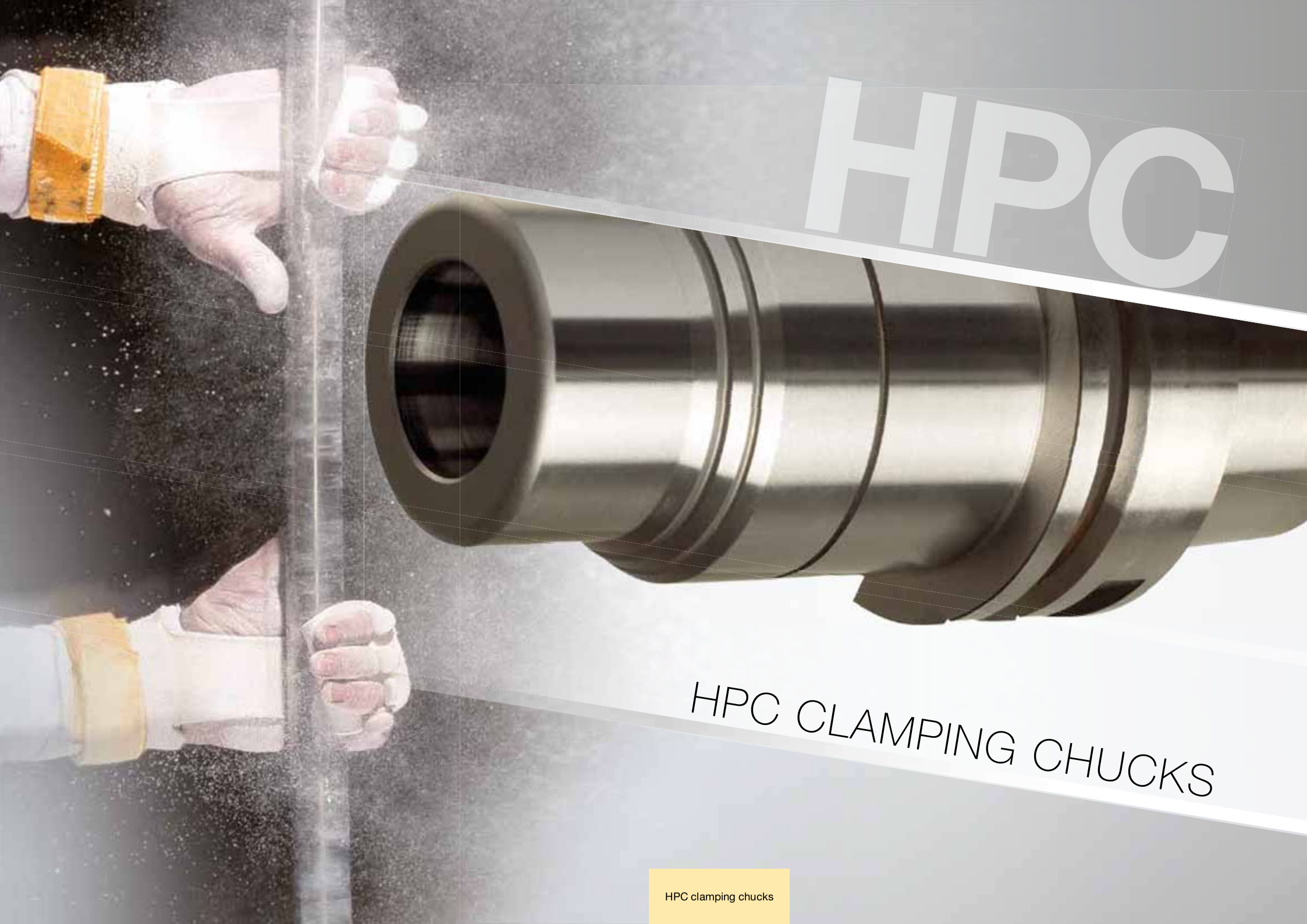

HPC

HPC CLAMPING CHUCKS

AT FULL SPEED A FIRM GRASP ON EVERYTHING!

HIGH CLAMPING FORCE
IDEAL CLAMPING FORCE TRANSFER TO THE TOOL
IMMENSE SPEEDS
MAXIMUM RIGIDITY
OPTIMAL FOR imachining®

PRECISION CLAMPING CHUCKS
TECHNOLOGY AND ADVANTAGES

Gühring's precision clamping chucks offer highest clamping force particularly for milling operations but also for drilling and reaming as well as under HSC and HPC conditions. The special clamping sleeve is clamped via a worm gear and optimally transfers the enormous clamping force onto the clamped tool. This enables clamping forces of, for example, > 200 Nm for 12 mm shank diameters or > 300 Nm for 16 mm shank diameters.

New: Now available with PinLock drawout protection!

- **This system offers the following advantages:**
- increased cutting depths in comparison to conventional tool holders
- increased radial engagement and subsequently higher material removal rate
- maintenance-free technology
- suitable for straight shanks to DIN 1835 A and B as well a to 6535 HA, HB and HE
- concentricity 3 µm with 2.5 x D
- balancing quality: G2.5 / 20,000 rev./min or U< 1.2 gmm

HSK-A precision clamping chucks

Product information

- for heavy-duty cutting as well as HSC and HPC
- HSK-A to ISO 12164-1/DIN 69893-1
- balancing quality: G2.5 / 20,000 rev./min or U< 1.2 gmm
- for tool shank tolerance h6
- highest clamping force and stability thanks to mech. tension gearing
- actuation torque for clamping initiation 10 Nm
- suitable for internal cooling up to 80 bar

Scope of delivery

- hexagon clamping key article no. 4912 4.600
-
- order clamping sleeves article no. 4302, 4235, 4236, 4237 separately
- order coolant supply set article no. 4949 separately
- order torque wrench 10 Nm article no. 4987 10.000 and hexagon socket/attachments article no. 4916 4.000 separately

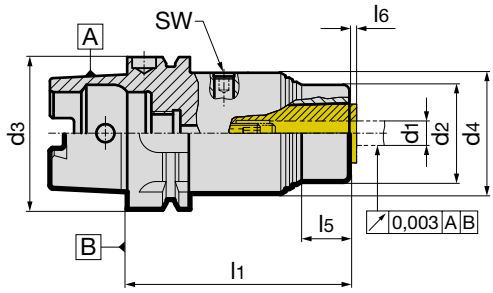

Article no. 4300

HSK-A d_3	nom. size	for clamping-Ø $d_{1\ h6}$ mm	d_2 mm	d_4 mm	l_1 mm	l_5 mm	l_6 mm	SW	Order no.
63	20	3-20	40	53	92	20	3.0	4	**4300 20.063**
100	20	3-20	40	70	100	18	3.0	4	**4300 20.100**
100	25	16-32	52.5	70	139	-	3.5	4	**4300 25.100**

ISO taper precision clamping chucks

Product information

- for heavy-duty cutting as well as HSC and HPC
- ISO taper to DIN ISO 7388-1 form AD
- balancing quality: G2.5 / 20,000 rev./min or U< 1.2 gmm
- for tool shank tolerance h6
- highest clamping force and stability thanks to mech. tension gearing
- actuation torque for clamping initiation 10 Nm
- suitable for internal cooling up to 80 bar central coolant supply form AD

Scope of delivery

- hexagon clamping key article no. 4912 4.600
- order clamping sleeves article no. 4302, 4235, 4236, 4237 separately
- order pull studs article no. 4925 or 4926 separately
- order torque wrench 10 Nm, article no. 4987 10.000, and hexagon socket/attachments, article no. 4916 4.000, separately
- form AD/B on request

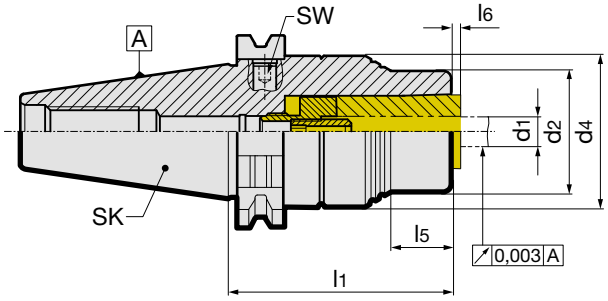

Article no. 4301

SK	nom. size	for clamping-Ø $d_{1\ h6}$ mm	d_2 mm	d_4 mm	l_1 mm	l_5 mm	l_6 mm	SW	Order no.
40	20	3-20	40	50	62.5	20	3.0	4	**4301 20.040**
50	20	3-20	40	63	62	18	3.0	4	**4301 20.050**
50	25	16-32	52.5	70	101.5	-	3.5	4	**4301 25.050**

MAS/BT precision clamping chucks

Product information
- for heavy-duty cutting as well as HSC and HPC
- MAS/BT to DIN ISO7388-2 form JD
- balancing quality: G2.5 / 20,000 rev./min or U< 1.2 gmm
- for tool shank tolerance h6
- highest clamping force and stability thanks to mech. tension gearing
- actuation torque for clamping initiation 10 Nm
- suitable for internal cooling up to 80 bar

Scope of delivery
- hexagon clamping key article no. 4912 4.600
- order clamping sleeves article no. 4302, 4235, 4236, 4237 separately
- order pull studs article no. 4927 or 4928 separately
- order torque wrench 10 Nm article no. 4987 10.000 and hexagon socket/attachments article no. 4916 4.000 separately
- form AD/B on request

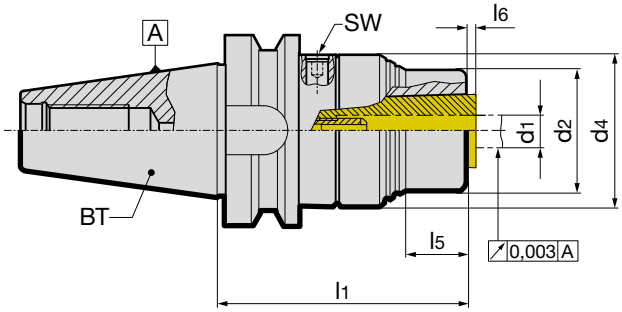

	Article no.	4244

MAS/BT	nom. size	for clamping-Ø $d_{1\ h6}$ mm	d_2 mm	d_4 mm	l_1 mm	l_5 mm	l_6 mm	SW	Order no.
30	20	3-20	40	53	82.0	20	3.0	4	**4244 20.030**
40	20	3-20	40	63	70.5	18	3.0	4	**4244 20.040**
40	20	3-20	40	63	120.0	48	3.0	4	**4244 120.040**
50	20	3-20	40	63	81.5	18	3.0	4	**4244 20.050**
50	20	3-20	40	63	167.5	84	3.0	4	**4244 120.050**
40	25	16-32	53	63	109.5	-	3.5	4	**4244 25.040**
50	25	16-32	52.5	70	120.5	-	3.5	4	**4244 25.050**

CAT precision clamping chucks

Product information
- for heavy-duty cutting as well as HSC and HPC
- CAT to ASME B5.50
- balancing quality: G2.5 / 20,000 rev./min or U< 1.2 gmm
- for tool shank tolerance h6
- highest clamping force and stability thanks to mech. tension gearing
- actuation torque for clamping initiation 10 Nm
- suitable for internal cooling up to 80 bar
- central coolant supply form DU
- CAT40 d4: does not correspond to ASME B5.50

Scope of delivery
- hexagon clamping key article no. 4912 4.600
- order clamping sleeves article no. 4302, 4235, 4236, 4237 separately
- order torque wrench 10 Nm article no. 4987 10.000 and hexagon socket/attachments article no. 4916 4.000 separately
- CAT pull studs available on request

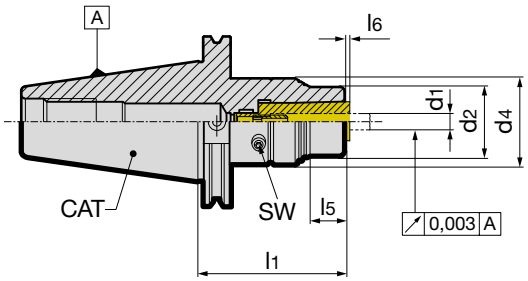

	Article no.	4243

CAT	nom. size	for clamping-Ø $d_{1\ h6}$ mm	d_2 mm	d_4 mm	l_1 mm	l_5 mm	l_6 mm	SW	Order no.
40	20	3-20	40	50	62.5	20	3.0	4	**4243 20.040**
50	20	3-20	40	63	62	18	3.0	4	**4243 20.050**
50	25	16-32	52.5	70	101.5	-	3.5	4	**4243 25.050**

Product information

- slender extension for mounting in HPC chucks or hydraulic shrink fit chucks
- for tool shank tolerances h6
- high clamping force
- actuation from back by using supplied hexagon key (SW 1)
- actuating torque for clamping initiation max. 3 Nm

Scope of delivery

- hexagon clamping key article no. 4912 4.000
- order clamping sleeves article no. 4302, 4235 separately
- for optimal operation order torque wrench article no. 4915 3,000 separately

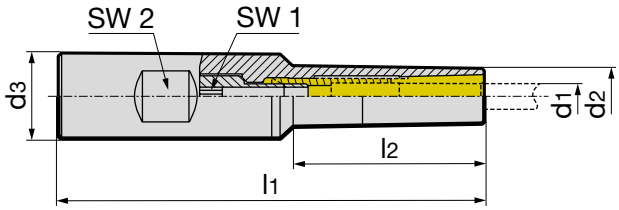

							Article no.	4208
d_3 mm	nom. size	for clamping-Ø d_1 mm	d_2 mm	l_1 mm	SW 1	SW 2	kg	**Order no.**
14	6	1-6	14.0	100	4	13	0.26	**4208 6.014**
14	6	1-6	14.0	150	4	13	0.32	**4208 6.114**
14	6	1-6	14.0	190	4	13	0.45	**4208 6.214**
20	6	1-6	20.0	100	4	16	0.34	**4208 6.020**
20	6	1-6	20.0	150	4	16	0.46	**4208 6.120**

Power milling with Pin**Lock**

Drawout secure volume machining – with Gührojet cooling
Perfect combination - HPC clamping chuck with PinLock drawout safety

- process reliable (no tool drawout, no component damage)
- long tool life and optimal surface finish
- simple handling
- standard milling tools therefore no licenses required

Thanks to the application of a PinLock clamping sleeve with securing pin any drawout of the applied standard milling tools with HB shank to DIN 6535 is safely prevented. The combination of HPC clamping technology with perfect concentricity and the efficient Gührojet peripheral cooling achieves, until now, unachieved metal removal rates, tool life and surface quality. All this with standard tools and absolute protection against unwanted drawout effects.

Product information

- for clamping tools with straight shank
- for maximum holding torque
- design with peripheral cooling thanks to long slots
- for tool shank tolerance h6
- Type 1: for HPC power clamping chucks
- Type 2: for HPC extensions
- Type P: PinLock drawout protection incl. 3 locking pins and assembly tool (supplied without adjustment)

Scope of delivery

- incl. length setting screw

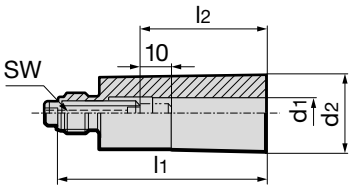

①

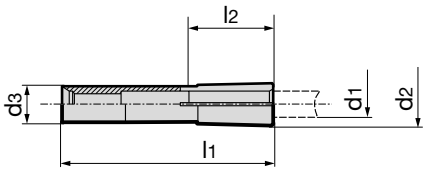

②

GÜHROJET
PINLOCK

						Article no.	4302
nom. size	for shank Ø $d_{1\ h6}$ mm	d_2 mm	l_1 mm	l_2 mm	Type	SW	Order no.
6	1	10	50	28	2	–	4302 1.006
6	2	10	50	28	2	–	4302 2.006
6	3	10	50	28	2	–	4302 3.006
6	4	10	50	28	2	–	4302 4.006
6	5	10	50	28	2	–	4302 5.006
6	6	10	50	28	2	–	4302 6.006
20	3	24.6	66	28	1	4	4302 3.020
20	4	24.6	66	28	1	4	4302 4.020
20	5	24.6	66	28	1	4	4302 5.020
20	6	24.6	66	36	1	4	4302 6.020
20	8	24.6	66	36	1	4	4302 8.020
20	10	24.6	66	40	1	4	4302 10.020
20	12	24.6	66	45	1	4	4302 12.020
20	14	24.6	66	45	1	4	4302 14.020
20	16	24.6	66	48	1	4	4302 16.020
20	18	24.6	66	48	1	4	4302 18.020
20	20	24.6	66	50	1	4	4302 20.020
32	20	45.5	90	50	1	4	4302 20.032
32	22	45.5	90	50	1	4	4302 22.032
32	25	45.5	90	56	1	4	4302 25.032
32	32	45.5	90	59	1	4	4302 32.032
25	16	39	87.5	48	1	5	4302 16.025
25	20	39	87.5	50	1	5	4302 20.025
25	22	39	87.5	50	1	5	4302 22.025
25	25	39	87.5	56	1	5	4302 25.025
25	32	39	87.5	59	1	5	4302 32.025
20	6	24.6	66	36	1/P	4	4302 6.120
20	8	24.6	66	36	1/P	4	4302 8.120
20	10	24.6	66	40	1/P	4	4302 10.120
20	12	24.6	66	45	1/P	4	4302 12.120
20	14	24.6	66	45	1/P	4	4302 14.120
20	16	24.6	66	48	1/P	4	4302 16.120
20	18	24.6	66	48	1/P	4	4302 18.120
20	20	24.6	66	50	1/P	4	4302 20.120
25	16	39	87.5	48	1/P	5	4302 16.125
25	20	39	87.5	50	1/P	5	4302 20.125
25	22	39	87.5	50	1/P	5	4302 22.125
25	25	39	87.5	56	1/P	5	4302 25.125

Product information
- for clamping tools with straight shank
- high holding torque
- sealed design with short slots
- for tool shank tolerance h6
- Type 1: for HPC power clamping chucks
- Type 2: for HPC extensions

Scope of delivery
- incl. length setting screw

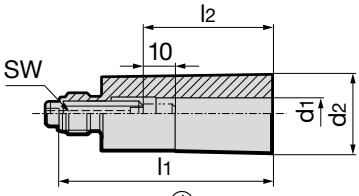

①

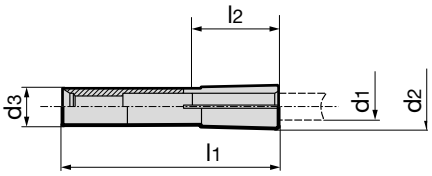

②

						Article no.	4235
nom. size	for shank Ø $d_{1\ h6}$ mm	d_2 mm	l_1 mm	l_2 mm	type	SW	Code-Nr.
6	1	24.6	50	28	2	–	4235 1.006
6	2	24.6	50	28	2	–	4235 2.006
6	3	24.6	50	28	2	–	4235 3.006
6	4	24.6	50	28	2	–	4235 4.006
6	5	24.6	50	28	2	–	4235 5.006
6	6	24.6	50	36	2	–	4235 6.006
20	3	24.6	66	28	1	4	4235 3.020
20	4	24.6	66	28	1	4	4235 4.020
20	5	24.6	66	28	1	4	4235 5.020
20	6	24.6	66	36	1	4	4235 6.020
20	8	24.6	66	36	1	4	4235 8.020
20	10	24.6	66	40	1	4	4235 10.020
20	12	24.6	66	45	1	4	4235 12.020
20	14	24.6	66	45	1	4	4235 14.020
20	16	24.6	66	48	1	4	4235 16.020
20	18	24.6	66	48	1	4	4235 18.020
20	20	24.6	66	50	1	4	4235 20.020
32	20	45.5	90	50	1	4	4235 20.032
32	22	45.5	90	50	1	4	4235 22.032
32	25	45.5	90	56	1	4	4235 25.032
32	32	45.5	90	59	1	4	4235 32.032
25	16	39	87.5	48	1	5	4235 16.025
25	20	39	87.5	50	1	5	4235 20.025
25	22	39	87.5	50	1	5	4235 22.025
25	25	39	87.5	56	1	5	4235 25.025
25	32	39	87.5	59	1	5	4235 32.025

Product information
- for clamping imperial tool shanks
- for maximum holding torque
- design with peripheral cooling thanks to long slots
- for tool shank tolerance h6
- Type P: PinLock drawout protection incl. 3 locking pins and assembly tool (supplied without adjustment)

Scope of delivery
- incl. length setting screw

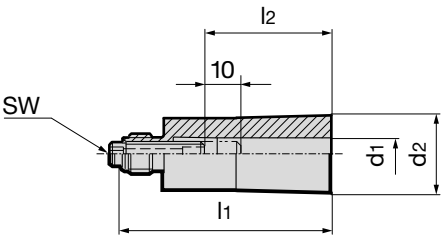

GÜHROJET PINLOCK

						Article no.	4236
nom. size	for shank Ø $d_{1\ h6}$ inch	d_2 mm	l_1 mm	l_2 mm	Type	SW	Order no.
20	1/8"	24.6	66	28	–	4	**4236 1.020**
20	3/16"	24.6	66	28	–	4	**4236 2.020**
20	1/4"	24.6	66	36	–	4	**4236 3.020**
20	5/16"	24.6	66	36	–	4	**4236 4.020**
20	3/8"	24.6	66	40	–	4	**4236 5.020**
20	7/16"	24.6	66	45	–	4	**4236 6.020**
20	1/2"	24.6	66	45	–	4	**4236 7.020**
20	9/16"	24.6	66	45	–	4	**4236 8.020**
20	5/8"	24.6	66	48	–	4	**4236 9.020**
20	11/16"	24.6	66	48	–	4	**4236 10.020**
20	3/4"	24.6	66	50	–	4	**4236 11.020**
32	3/4"	45.5	90	50	–	4	**4236 1.032**
32	1"	45.5	90	56	–	4	**4236 2.032**
32	1 1/4“	45.5	90	59	–	4	**4236 3.032**
25	3/4“	39	87.5	50	–	5	**4236 1.025**
25	1“	39	87.5	56	–	5	**4236 2.025**
20	1/2“	24.6	66	46	P	4	**4236 1.120**
20	5/8“	24.6	66	48.5	P	4	**4236 2.120**
25	3/4“	39	87.5	51.5	P	5	**4236 1.125**
25	1“	39	87.5	58	P	5	**4236 2.125**

Product information
- for clamping imperial tool shanks
- high holding torque
- sealed design with short slots
- for tool shank tolerance h6

Scope of delivery
- incl. length setting screw

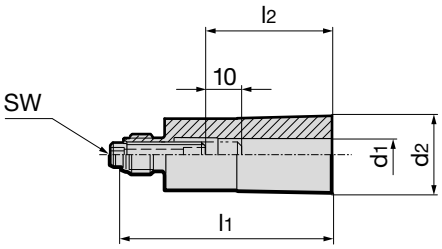

					Article no.	4237
nom. size	for shank Ø $d_{1\ h6}$ inch	d_2 mm	l_1 mm	l_2 mm	SW	Order no.
20	1/8"	24.6	66	28	4	**4237 1.020**
20	3/16"	24.6	66	28	4	**4237 2.020**
20	1/4"	24.6	66	36	4	**4237 3.020**
20	5/16"	24.6	66	36	4	**4237 4.020**
20	3/8"	24.6	66	40	4	**4237 5.020**
20	7/16"	24.6	66	45	4	**4237 6.020**
20	1/2"	24.6	66	45	4	**4237 7.020**
20	9/16"	24.6	66	45	4	**4237 8.020**
20	5/8"	24.6	66	48	4	**4237 9.020**
20	11/16"	24.6	66	48	4	**4237 10.020**
20	3/4"	24.6	66	50	4	**4237 11.020**
25	3/4“	39	87.5	50	5	**4237 1.025**
25	1“	39	87.5	56	5	**4237 2.025**
32	3/4"	45.5	90	50	4	**4237 1.032**
32	1"	45.5	90	56	4	**4237 2.032**
32	1 1/4"	45.5	90	59	4	**4237 3.032**

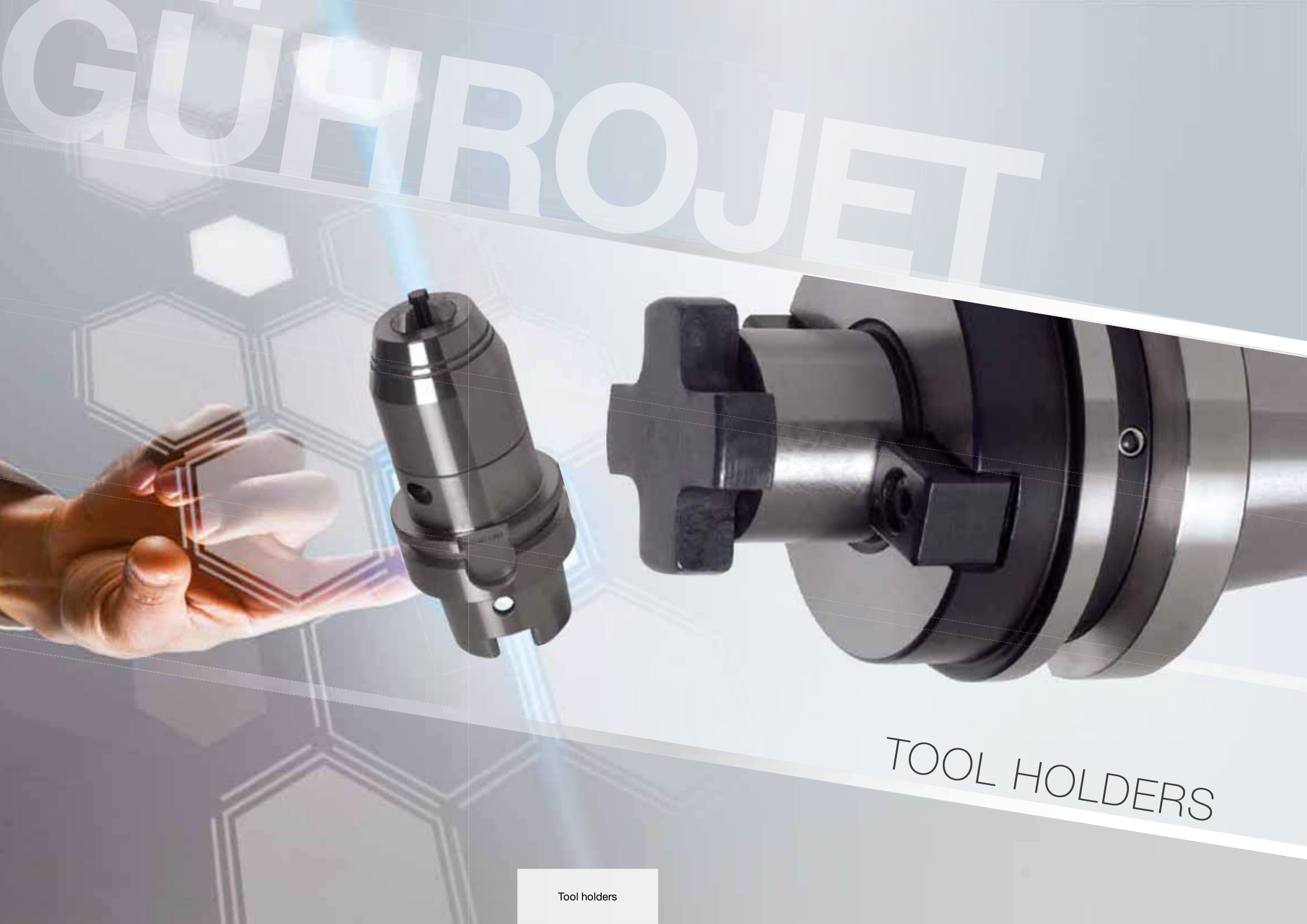
GÜHROJET
TOOL HOLDERS

TOOL HOLDERS WITH PERIPHERAL COOLING

GÜHROJET

OPTIMAL CHIP EVACUATION

HIGH PROCESS RELIABILITY

IMPROVED COOLING LUBRICATION

Product information

- balancing quality: G6.3 / 15,000 rev./min
- with bore to DIN 1835-2 form B "Weldon"
- dimensions to DIN 69882-4
- from bore d1 = 25 with two clamping screws
- with coolant ducts in the bore for peripheral cooling, improving process and tool life
- coolant ducts:
  d = 6 - 14 with two coolant ducts
  d = 16 - 40 with four coolant ducts
- HSK-A to ISO 12164-1 / DIN 69893-1

Scope of delivery

- incl. clamping screw article no. 4903
- order coolant supply set, article no. 4949 separately
- HSK-A32, 40 & 80 on request

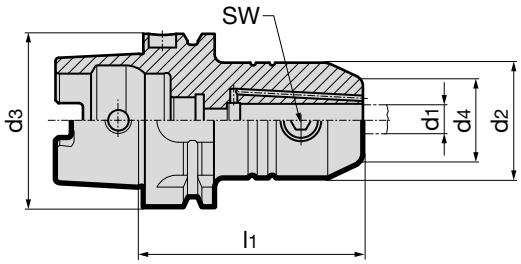

GÜHROJET

HSK-A d_3	clamping-Ø d_1 H5 mm	d_2 mm	d_4 mm	l_1 mm	SW	kg	Article no. 4232 Order no.
32	6	25	15	60	3	0.24	4232 6.032
32	8	28	20	60	4	0.27	4232 8.032
32	10	35	25	65	5	0.31	4232 10.032
32	12	42	30	65	6	0.41	4232 12.032
40	6	25	15	60	3	0.33	4232 6.040
40	8	28	20	60	4	0.35	4232 8.040
40	10	35	25	60	5	0.47	4232 10.040
40	12	42	30	70	5	0.58	4232 12.040
40	14	44	32	75	6	0.59	4232 14.040
40	16	48	36	75	6	0.64	4232 16.040
50	6	25	15	65	3	0.50	4232 6.050
50	8	28	20	65	4	0.60	4232 8.050
50	10	35	25	65	5	0.60	4232 10.050
50	12	42	30	80	6	0.90	4232 12.050
50	14	44	32	80	6	0.90	4232 14.050
50	16	48	36	80	6	1.00	4232 16.050
50	18	50	38	80	6	1.00	4232 18.500
50	20	52	40	80	8	1.00	4232 20.050
63	6	25	15	65	3	0.80	4232 6.063
63	8	28	20	65	4	0.80	4232 8.063
63	10	35	25	65	5	0.90	4232 10.063
63	12	42	30	80	6	1.20	4232 12.063
63	14	44	32	80	6	1.20	4232 14.063
63	16	48	36	80	6	1.30	4232 16.063
63	18	50	38	80	6	1.40	4232 18.063
63	20	52	40	80	8	1.40	4232 20.063
63	25	65	45	110	10	2.40	4232 25.063
63	32	72	56	110	10	2.70	4232 32.063
80	6	25	15	80	3	1.75	4232 6.080
80	8	28	20	80	4	1.90	4232 8.080
80	10	35	25	80	5	2.10	4232 10.080
80	12	42	30	80	6	2.10	4232 12.080
80	14	44	32	80	6	2.30	4232 14.080
80	16	48	36	100	6	2.50	4232 16.080
80	18	50	38	100	6	2.50	4232 18.080
80	20	52	40	100	8	2.70	4232 20.080
80	25	65	45	100	10	2.80	4232 25.080
80	32	72	56	110	10	2.85	4232 32.080
80	40	80	60	120	10	2.98	4232 40.080
100	6	25	15	80	3	3.00	4232 6.100
100	8	28	20	80	4	3.20	4232 8.100
100	10	35	25	80	5	3.40	4232 10.100
100	12	42	30	80	6	3.40	4232 12.100
100	14	44	32	80	6	3.50	4232 14.100
100	16	48	36	100	6	3.80	4232 16.100
100	18	50	38	100	6	3.80	4232 18.100
100	20	52	40	100	8	3.90	4232 20.100
100	25	65	45	100	10	3.90	4232 25.100
100	32	72	56	100	10	4.20	4232 32.100
100	40	80	60	110	10	4.60	4232 40.100

Product information

- balancing quality: G6.3 / 15,000 rev./min
- dimensions to DIN 69882-4
- with bore to DIN 1835-2 form B "Weldon"
- from bore d1 = 25 with two clamping screws
- HSK-A to ISO 12164-1 / DIN 69893-1

Scope of delivery

- incl. clamping screw article no. 4903
- order coolant supply set, article no. 4949 separately

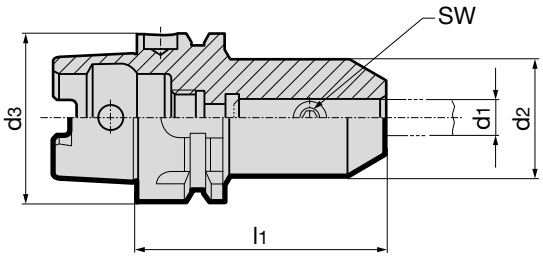

							Article no.	4329
HSK-A d_3	clamping-Ø d_1 H5 mm	d_2 mm	d_4 mm	l_1 mm	SW	kg		Order no.
32	6	25	15	60	3	0.24		**4329 6.032**
32	8	28	20	60	4	0.27		**4329 8.032**
32	10	35	25	65	5	0.31		**4329 10.032**
32	12	42	30	65	6	0.41		**4329 12.032**
40	6	25	15	60	3	0.33		**4329 6.040**
40	8	28	20	60	4	0.35		**4329 8.040**
40	10	35	25	60	5	0.47		**4329 10.040**
40	12	42	30	70	6	0.58		**4329 12.040**
40	14	44	32	75	6	0.59		**4329 14.040**
40	16	48	36	75	6	0.64		**4329 16.040**
50	6	25	15	65	3	0.52		**4329 6.050**
50	8	28	20	65	4	0.55		**4329 8.050**
50	10	35	25	65	5	0.62		**4329 10.050**
50	12	42	30	80	6	0.87		**4329 12.050**
50	14	44	32	80	6	0.90		**4329 14.050**
50	16	48	36	80	6	0.94		**4329 16.050**
50	18	50	38	80	6	0.96		**4329 18.050**
50	20	52	40	80	8	0.97		**4329 20.050**
63	6	25	15	65	3	0.81		**4329 6.063**
63	8	28	20	65	4	0.83		**4329 8.063**
63	10	35	25	65	5	0.89		**4329 10.063**
63	12	42	30	80	6	1.20		**4329 12.063**
63	14	44	32	80	6	1.20		**4329 14.063**
63	16	48	36	80	6	1.30		**4329 16.063**
63	18	50	38	80	6	1.35		**4329 18.063**
63	20	52	40	80	8	1.40		**4329 20.063**
63	25	65	45	110	10	2.40		**4329 25.063**
63	32	72	56	110	10	2.70		**4329 32.063**
80	6	25	15	80	3	1.75		**4329 6.080**
80	8	28	20	80	4	1.90		**4329 8.080**
80	10	35	25	80	5	2.10		**4329 10.080**
80	12	42	30	80	6	2.10		**4329 12.080**
80	14	44	32	80	6	2.30		**4329 14.080**
80	16	48	36	100	6	2.50		**4329 16.080**
80	18	50	38	100	6	2.50		**4329 18.080**
80	20	52	40	100	8	2.70		**4329 20.080**
80	25	65	45	100	10	2.80		**4329 25.080**
80	32	72	56	110	10	2.85		**4329 32.080**
80	40	80	60	120	10	2.98		**4329 40.080**
100	6	25	15	80	3	3.00		**4329 6.100**
100	8	28	20	80	4	3.20		**4329 8.100**
100	10	35	25	80	5	3.40		**4329 10.100**
100	12	42	30	80	6	3.40		**4329 12.100**
100	14	44	32	80	6	3.50		**4329 14.100**
100	16	48	36	100	6	3.80		**4329 16.100**
100	18	50	38	100	6	3.80		**4329 18.100**
100	20	52	40	100	8	3.90		**4329 20.100**
100	25	65	45	100	10	3.90		**4329 25.100**
100	32	72	56	100	10	4.20		**4329 32.100**
100	40	80	60	110	10	4.60		**4329 40.100**

Product information

- balancing quality: G6.3 / 15,000 rev./min
- dimensions to DIN 69882-5
- with bore to DIN 1835-2 form E "Whistle Notch" with groove on face side for identification
- from bore d1 = 25 with two clamping screws
- HSK-A to ISO 12164-1 / DIN 69893-1

Scope of delivery

- incl. clamping screw article no. 4903 and adjustment screw article no. 4904
- order coolant supply set, article no. 4949 separately

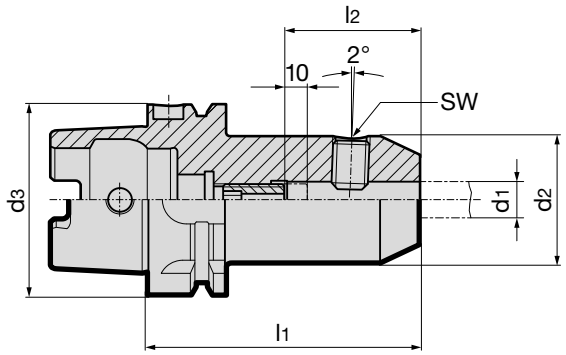

									Article no.	4334
HSK-A d_3	clamping-Ø d_1 H5 mm	d_2 mm	d_4 mm	l_1 mm	l_2 mm	incl. adjustment screw 4904 …	SW	kg		Order no.
32	6	25	15	80	36	6.014	3	0.32		**4334 6.032**
32	8	28	20	80	36	8.014	4	0.36		**4334 8.032**
32	10	35	25	80	40	10.014	5	0.46		**4334 10.032**
32	12	42	30	80	45	12.014	6	0.57		**4334 12.032**
40	6	25	15	80	36	6.014	3	0.36		**4334 6.040**
40	8	28	20	80	36	8.014	4	0.40		**4334 8.040**
40	10	35	25	80	40	10.014	5	0.50		**4334 10.040**
40	12	42	30	90	45	12.014	6	0.68		**4334 12.040**
40	14	44	32	90	45	12.014	6	0.72		**4334 14.040**
40	16	48	36	90	48	16.014	6	0.77		**4334 16.040**
50	6	25	15	80	36	6.014	3	0.58		**4334 6.050**
50	8	28	20	80	36	8.014	4	0.62		**4334 8.050**
50	10	35	25	80	40	10.014	5	0.73		**4334 10.050**
50	12	42	30	90	45	12.014	6	0.97		**4334 12.050**
50	14	44	32	90	45	12.014	6	1.00		**4334 14.050**
50	16	48	36	90	48	16.014	6	1.09		**4334 16.050**
50	18	50	38	90	48	16.014	6	1.12		**4334 18.050**
50	20	52	40	100	50	20.114	8	1.30		**4334 20.050**
63	6	25	15	80	36	6.014	3	0.86		**4334 6.063**
63	8	28	20	80	36	8.014	4	0.90		**4334 8.063**
63	10	35	25	80	40	10.014	5	1.00		**4334 10.063**
63	12	42	30	90	45	12.014	6	1.24		**4334 12.063**
63	14	44	32	90	45	12.014	6	1.28		**4334 14.063**
63	16	48	36	100	48	16.014	6	1.53		**4334 16.063**
63	18	50	38	100	48	16.014	6	1.60		**4334 18.063**
63	20	52	40	100	50	20.114	8	1.65		**4334 20.063**
63	25	65	45	110	56	20.114	10	2.34		**4334 25.063**
63	32	72	56	110	60	20.114	10	2.54		**4334 32.063**
80	6	25	15	90	36	6.014	3	2.20		**4334 6.080**
80	8	28	20	90	36	8.014	4	2.25		**4334 8.080**
80	10	35	25	90	40	10.014	5	2.56		**4334 10.080**
80	12	42	30	100	45	12.014	6	2.60		**4334 12.080**
80	14	44	32	100	45	12.014	6	2.85		**4334 14.080**
80	16	48	36	100	48	16.014	6	2.88		**4334 16.080**
80	18	50	38	100	48	16.014	6	2.90		**4334 18.080**
80	20	52	40	110	50	20.114	8	3.05		**4334 20.080**
80	25	65	45	110	56	20.114	10	3.10		**4334 25.080**
80	32	72	56	120	60	20.114	10	3.20		**4334 32.080**
100	6	25	15	90	36	6.014	3	2.60		**4334 6.100**
100	8	28	20	90	36	8.014	4	2.60		**4334 8.100**
100	10	35	25	90	40	10.014	5	2.60		**4334 10.100**
100	12	42	30	100	45	12.014	6	2.80		**4334 12.100**
100	14	44	32	100	45	12.014	6	2.85		**4334 14.100**
100	16	48	36	100	48	16.014	6	2.97		**4334 16.100**
100	18	50	38	100	48	16.014	6	3.10		**4334 18.100**
100	20	52	40	110	50	20.114	8	3.23		**4334 20.100**
100	25	65	45	120	56	20.114	10	4.06		**4334 25.100**
100	32	72	56	120	60	20.114	10	4.40		**4334 32.100**

Product information

- balancing quality: G6.3 / 15,000 rev./min
- for tool shank tolerance h6
- dimensions to DIN 69882-5
- with bore to DIN 1835-2 form E "Whistle Notch" with groove on face side for identification
- from bore d1 = 25 with two clamping screws article no. 4903
- HSK-C to ISO 12164-1/DIN 69893-1

Scope of delivery

- incl. clamping screw article no. 4903 and adjustment screw article no. 4905

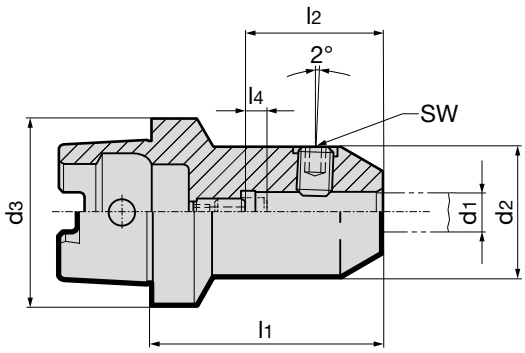

								Article no.		4333
HSK-C d_3	clamping-Ø d_1 H5 mm	d_2 mm	d_4 mm	l_1 mm	l_2 mm	l_4 mm	incl. adjustment screw 4905 …	SW	kg	Order no.
32	6	25	15	60	36	10	6.014	3	0.23	**4333 6.032**
32	8	28	20	60	36	10	8.014	4	0.28	**4333 8.032**
32	10	35	25	65	40	10	10.014	5	0.43	**4333 10.032**
40	6	25	15	60	36	10	6.014	3	0.29	**4333 6.040**
40	8	28	20	60	36	10	8.014	4	0.33	**4333 8.040**
40	10	35	25	65	40	10	10.014	5	0.47	**4333 10.040**
40	12	42	30	70	45	8	12.014	6	0.67	**4333 12.040**
40	14	44	32	70	45	8	12.014	6	0.73	**4333 14.040**
40	16	48	36	75	48	8	16.014	6	0.92	**4333 16.040**
40	20	52	40	80	50	8	20.114	8	1.11	**4333 20.040**
50	6	25	15	60	36	8	6.014	3	0.42	**4333 6.050**
50	8	28	20	60	36	8	8.014	4	0.46	**4333 8.050**
50	10	35	25	65	40	8	10.014	5	0.57	**4333 10.050**
50	12	42	30	75	45	10	12.014	6	0.80	**4333 12.050**
50	14	44	32	75	45	10	12.014	6	0.87	**4333 14.050**
50	16	48	36	80	48	10	16.014	6	1.02	**4333 16.050**
50	18	49	38	80	48	10	16.014	6	1.09	**4333 18.050**
50	20	52	40	80	50	8	20.114	8	1.15	**4333 20.050**
50	25	65	45	95	56	8	20.114	10	2.14	**4333 25.050**
63	6	25	15	60	36	8	6.014	3	0.64	**4333 6.063**
63	8	28	20	60	36	8	8.014	4	0.66	**4333 8.063**
63	10	35	25	65	40	8	10.014	5	0.78	**4333 10.063**
63	12	42	30	75	45	10	12.014	6	0.99	**4333 12.063**
63	14	44	32	75	45	10	12.014	6	1.03	**4333 14.063**
63	16	48	36	80	48	10	16.014	6	1.21	**4333 16.063**
63	18	50	38	80	48	10	16.014	6	1.26	**4333 18.063**
63	20	52	40	80	50	8	20.114	8	1.31	**4333 20.063**
63	25	65	45	95	56	8	20.114	10	2.23	**4333 25.063**
63	32	72	56	100	60	8	20.114	10	2.75	**4333 32.063**

Product information

- balancing quality: G6.3 / 15,000 rev./min
- with bore to DIN 1835-2 form B "Weldon"
- ISO taper to DIN ISO 7388-1 form AD/AF
- form AF supplied with threaded pins in bores
- with coolant ducts in the bore for peripheral cooling, improving process and tool life
- from bore d1 = 25 mm with two clamping screws article no. 4903
- coolant supply form AD/AF
- coolant ducts:
  d_1 = 6 - 18 mm with two coolant ducts
  d_1 = 20 - 32 mm with four coolant ducts

Scope of delivery

- incl. clamping screw article no. 4903
- incl. O-ring for sealing

- order pull studs, article no. 4925 or 4926 separately

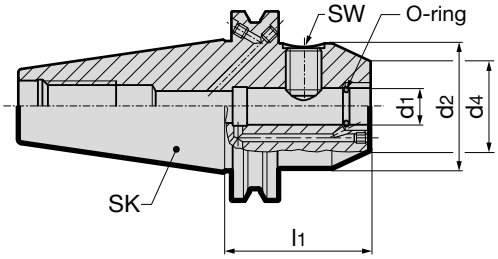

GÜHROJET

					Article no.	4317
ISO taper/form	clamping-Ø d_1 H5 mm	d_2 mm	d_4 mm	l_1 mm	SW	Order no.
40 AD	16	45	36	35	6	4317 916.040
40 AD	20	45	40	35	8	4317 920.040
40 AD	25	50	45	35	10	4317 925.040
40 AD/AF	6	25	15	50	3	4317 6.040
40 AD/AF	8	28	20	50	4	4317 8.040
40 AD/AF	10	35	25	50	5	4317 10.040
40 AD/AF	12	42	30	50	6	4317 12.040
40 AD/AF	14	44	32	50	6	4317 14.040
40 AD/AF	16	48	36	63	6	4317 16.040
40 AD/AF	18	50	38	63	6	4317 18.040
40 AD/AF	20	52	40	63	8	4317 20.040
40 AD/AF	6	25	15	100	3	4317 106.040
40 AD/AF	8	28	20	100	4	4317 108.040
40 AD/AF	10	35	25	100	5	4317 110.040
40 AD/AF	12	42	30	100	6	4317 112.040
40 AD/AF	14	44	32	100	6	4317 114.040
40 AD/AF	16	48	36	100	6	4317 116.040
40 AD/AF	18	50	38	100	6	4317 118.040
40 AD/AF	20	52	40	100	8	4317 120.040
40 AD/AF	25	63	45	100	10	4317 25.040
40 AD/AF	32	72	56	100	10	4317 32.040
50 AD/AF	6	25	15	63	3	4317 6.050
50 AD/AF	8	28	20	63	4	4317 8.050
50 AD/AF	10	35	25	63	5	4317 10.050
50 AD/AF	12	42	30	63	6	4317 12.050
50 AD/AF	14	44	32	63	6	4317 14.050
50 AD/AF	16	48	36	63	6	4317 16.050
50 AD/AF	18	50	38	63	6	4317 18.050
50 AD/AF	20	52	40	63	8	4317 20.050
50 AD/AF	25	65	45	80	10	4317 25.050
50 AD/AF	32	72	56	100	10	4317 32.050

Product information

- balancing quality: G6.3 / 15,000 rev./min
- with bore to DIN 1835-2 form E "Whistle Notch"
- ISO taper to DIN ISO 7388-1 form AD/AF
- from bore d1 = 25 mm with two clamping screws article no. 4903

Scope of delivery

- incl. clamping screw article no. 4903 and adjustment screw
- order pull studs, article no. 4925 or 4926 separately

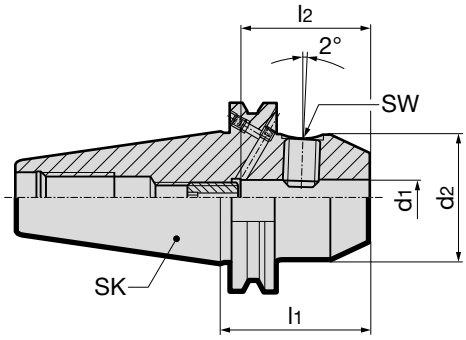

								Article no.	4322
ISO taper	clamping-Ø d_1 H5 mm	d_2 mm	d_4 mm	l_1 mm	l_2 mm	SW	kg		Order no.
40	6	25	15	50	36	3	0.9		**4322 6.040**
40	8	28	20	50	36	4	0.9		**4322 8.040**
40	10	35	25	50	40	5	1.0		**4322 10.040**
40	12	42	30	50	45	6	1.2		**4322 12.040**
40	14	44	32	50	45	6	1.2		**4322 14.040**
40	16	48	36	63	48	6	1.2		**4322 16.040**
40	18	50	38	63	48	6	1.4		**4322 18.040**
40	20	52	40	63	50	8	1.5		**4322 20.040**
40	25	65	45	100	56	10	2.3		**4322 25.040**
40	32	72	56	100	60	10	2.5		**4322 32.040**
50	6	25	15	63	36	3	2.7		**4322 6.050**
50	8	28	20	63	36	4	2.7		**4322 8.050**
50	10	35	25	63	40	5	2.9		**4322 10.050**
50	12	42	30	63	45	6	3.0		**4322 12.050**
50	14	44	32	63	45	6	3.0		**4322 14.050**
50	16	48	36	63	48	6	3.0		**4322 16.050**
50	18	50	38	63	48	6	3.0		**4322 18.050**
50	20	52	40	63	50	8	3.1		**4322 20.050**
50	25	65	45	80	56	10	3.7		**4322 25.050**
50	32	72	56	100	60	10	4.5		**4322 32.050**

Product information

- balancing quality: G6.3 / 15,000 rev./min
- with bore to DIN 1835-2 form B "Weldon"
- MAS/BT to DIN ISO 7388-2 form JD/JF
- from bore d1 = 25 with two clamping screws
- with coolant ducts in the bore for peripheral cooling, improving process and tool life
- coolant supply form JD/JF
  (* version JD without coolant supply over collar and without GÜHROJET)
- coolant ducts:
  d_1 = 6 - 18 mm with two coolant ducts
  d_1 = 20 - 32 mm with four coolant ducts

Scope of delivery

- incl. clamping screw article no. 4903
- incl. O-ring for sealing
- order pull studs, article no. 4927 or 4928 separately
- BT-50 on request

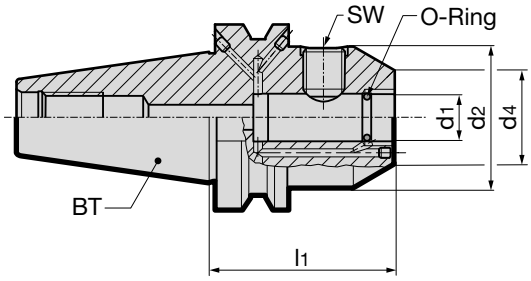

GÜHROJET

					Article no.	4234
BT	clamping-Ø d_1 H5 mm	d_2 mm	d_4 mm	l_1 mm	SW	Order no.
30*	6	25	15	50	3	4234 6.030
30*	8	28	20	50	4	4234 8.030
30*	10	35	25	50	5	4234 10.030
30*	12	42	30	50	6	4234 12.030
30*	14	44	32	50	6	4234 14.030
30*	16	48	36	63	6	4234 16.030
30*	18	50	38	63	6	4234 18.030
30*	20	52	40	63	8	4234 20.030
40*	16	45	36	35	6	4234 916.040
40*	20	45	40	35	8	4234 920.040
40*	25	45	45	35	10	4234 925.040
40	6	25	15	50	3	4234 6.040
40	8	28	20	50	4	4234 8.040
40	10	35	25	63	5	4234 10.040
40	12	42	30	63	6	4234 12.040
40	14	44	32	63	6	4234 14.040
40	16	48	36	63	6	4234 16.040
40	18	50	38	63	6	4234 18.040
40	20	52	40	63	8	4234 20.040
40	25	63	45	90	10	4234 25.040
40	32	72	56	100	10	4234 32.040
40	6	25	15	100	3	4234 106.040
40	8	28	20	100	4	4234 108.040
40	10	35	25	100	5	4234 110.040
40	12	42	30	100	6	4234 112.040
40	14	44	32	100	6	4234 114.040
40	16	48	36	100	6	4234 116.040
40	18	50	38	100	6	4234 118.040
40	20	52	40	100	8	4234 120.040

Product information

- balancing quality: G6.3 / 15,000 rev./min
- MAS/BT to DIN ISO 7388-2 form JD/JF
- with bore to DIN 1835-2 form E „WhistleNotch“
- from bore d1 = 25 with two clamping screws
- coolant supply form JD/JF

Scope of delivery

- incl. clamping screw article no. 4903 and adjustment screw
- order pull studs, article no. 4927 or 4928 separately

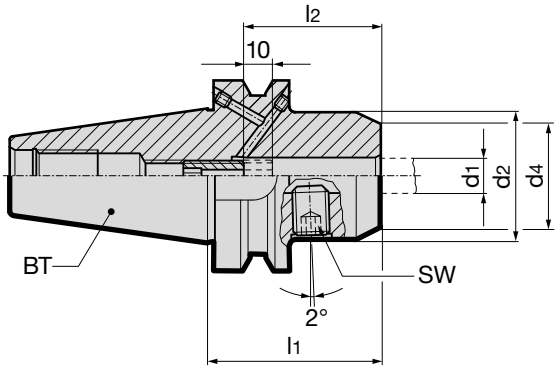

							Article no.	4233
BT	clamping-Ø d_1 H5 mm	d_2 mm	d_4 mm	l_1 mm	l_2 mm	SW		Order no.
40	6	25	15	50	36	3		**4233 6.040**
40	8	28	20	50	36	4		**4233 8.040**
40	10	35	25	63	40	5		**4233 10.040**
40	12	42	30	63	45	6		**4233 12.040**
40	14	44	32	63	45	6		**4233 14.040**
40	16	48	36	63	48	6		**4233 16.040**
40	18	50	38	63	48	6		**4233 18.040**
40	20	52	40	63	50	8		**4233 20.040**
40	25	63	45	90	56	10		**4233 25.040**
40	32	72	56	100	60	10		**4233 32.040**
50	6	25	15	63	36	3		**4233 6.050**
50	8	28	20	63	36	4		**4233 8.050**
50	10	35	25	63	40	5		**4233 10.050**
50	12	42	30	80	45	6		**4233 12.050**
50	14	44	32	80	45	6		**4233 14.050**
50	16	48	36	80	48	6		**4233 16.050**
50	18	50	38	80	48	6		**4233 18.050**
50	20	52	40	80	50	8		**4233 20.050**
50	25	65	45	100	56	10		**4233 25.050**
50	32	72	56	105	60	10		**4233 32.050**

Clamping screws

Product information
- for side lock holders with bore to DIN 1835-2, B and E, and HSK-A adaptors for tapping chucks, article nos. 4317/4322/4329/4333/4334/4343
- article no. 4903 12,001 (M12) only for article no. 4343

Scope of delivery
- minimum order quantity 5

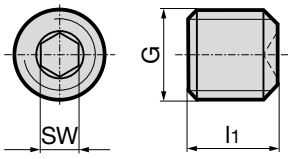

				Article no.	4903
for holder-Ø	G	l_1 mm	torque Nm	SW	Order no.
6	M6	10	5	3	**4903 6.000**
8	M8	10	10	4	**4903 8.000**
10	M10	12	15	5	**4903 10.000**
12/14	M12	14	28	6	**4903 12.000**
25	M12	12	28	6	**4903 12.001**
16/18	M14	16	42	6	**4903 14.000**
20	M16	16	50	8	**4903 16.000**
25	M18x2	20	60	10	**4903 18.000**
32/40	M20x2	20	72	10	**4903 20.000**
40	M20x2	25	72	10	**4903 20.001**
25	M14	11,5	42	6	**4903 14.001**
25	M16	12	50	8	**4903 16.001**

Adjustment screws

Product information
- for HSK-A Weldon side lock holders with bore to DIN 1835-2, form E, shrink fit chuck and shrink fit extensions

Scope of delivery
- minimum order quantity 5

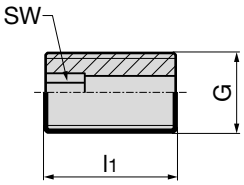

			Article no.	4904
G	l_1 mm	SW	Order no.	
M5	16	2.5	**4904 5.016**	
M5	20	2.5	**4904 5.020**	
M6	16	3.0	**4904 6.016**	
M6	20	3.0	**4904 6.020**	
M8	12	3.0	**4904 8.012**	
M8	18	4.0	**4904 8.018**	
M10	17	3.0	**4904 10.017**	
M10	20	5.0	**4904 10.020**	
M12	14	3.0	**4904 12.014**	
M12	20	5.0	**4904 12.020**	
M16	25	5.0	**4904 16.025**	
M20	25	6.0	**4904 20.025**	

Adjustment screws

Product information
- for HSK-C side lock with bore to DIN 1835-2, form E, article nos. 4333 / 4322

Scope of delivery
- minimum order quantity 5

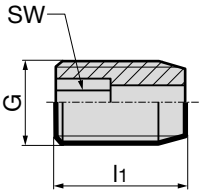

			Article no.	4905
G	l_1 mm	SW	Order no.	
M5	14	2.5	**4905 5.014**	
M5	16	2.5	**4905 5.016**	
M6	14	3.0	**4905 6.014**	
M6	16	3.0	**4905 6.016**	
M8	15	4.0	**4905 8.015**	
M8	17	4.0	**4905 8.017**	
M10	17	5.0	**4905 10.017**	
M10	20	5.0	**4905 10.020**	
M12	19	6.0	**4905 12.019**	
M12	22	6.0	**4905 12.022**	
M16	20	6.0	**4905 16.020**	
M20	26	6.0	**4905 20.026**	

Product information

- balancing quality: G2.5 / 25.000 rev./min or U< 1 gmm
- HSK-A to ISO 12164-1/DIN 69893-1
- for collet chucks with adjustment angle 8° according to DIN ISO 15488

Scope of delivery

- incl. retaining nut article no. 4306 and adjustment screw article no. 4902
- order collet, article no. 4307, clamping key, article no. 4913 and coolant supply set, article no. 4949 separately

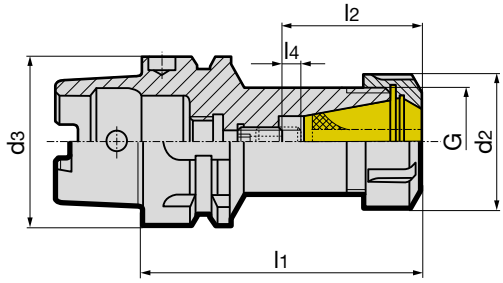

									Article no.	4304
HSK-A d_3	clamping range	d_2 mm	G	l_1 mm	l_2 mm	l_4 mm	incl. adjustment screw art. no. 4902...	kg		Order no.
32	ER 11 Ø 0.5-7.0	19	M14 x 0.75	55	25	6	11.012	0.20		**4304 11.032**
32	ER 16 Ø 0.5-10.0	28	M22 x 1.5	80	34	6	16.012	0.30		**4304 16.032**
32	ER 20 Ø 0.5-13.0	34	M25 x 1.5	70	40	8	16.012	0.30		**4304 20.032**
40	ER 16 Ø 0.5-10.0	28	M22 x 1.5	80	34	6	16.012	0.40		**4304 16.040**
40	ER 25 Ø 0.5-16.0	42	M32 x 1.5	80	44	8	25.014	0.50		**4304 25.040**
40	ER 32 Ø 1.0-20.0	50	M40 x 1.5	100	50	10	32.020	0.80		**4304 32.040**
50	ER 16 Ø 0.5-10.0	28	M22 x 1.5	100	34	6	16.012	0.70		**4304 16.050**
50	ER 25 Ø 0.5-16.0	42	M32 x 1.5	100	44	8	25.014	1.00		**4304 25.150**
50	ER 25 Ø 0.5-16.0	42	M32 x 1.5	80	44	8	25.014	0.80		**4304 25.050**
50	ER 32 Ø 1.0-20.0	50	M40 x 1.5	100	50	10	32.020	1.00		**4304 32.050**
63	ER 16 Ø 0.5-10.0	28	M22 x 1.5	100	34	6	16.012	0.90		**4304 16.063**
63	ER 16 Ø 0.5-10.0	28	M22 x 1.5	160	34	6	16.012	1.20		**4304 16.163**
63	ER 25 Ø 0.5-16.0	42	M32 x 1.5	80	42	6	25.014	1.00		**4304 25.063**
63	ER 25 Ø 0.5-16.0	42	M32 x 1.5	100	42	6	25.014	1.20		**4304 25.163**
63	ER 32 Ø 1.0-20.0	50	M40 x 1.5	100	50	10	32.020	1.40		**4304 32.063**
63	ER 40 Ø 3.0-26.0	63	M50 x 1.5	120	56	10	32.020	1.90		**4304 40.063**
80	ER 32 Ø 1.0-20.0	50	M40 x 1.5	100	50	10	32.020	1.90		**4304 32.080**
80	ER 32 Ø 1.0-20.0	50	M40 x 1.5	160	50	10	32.020	2.80		**4304 32.180**
80	ER 40 Ø 3.0-26.0	63	M50 x 1.5	120	56	10	32.020	2.80		**4304 40.080**
100	ER 32 Ø 1.0-20.0	50	M40 x 1.5	100	50	10	32.020	2.80		**4304 32.100**
100	ER 32 Ø 1.0-20.0	50	M40 x 1.5	160	50	10	32.020	3.60		**4304 32.101**
100	ER 40 Ø 3.0-26.0	63	M50 x 1.5	120	56	10	32.020	3.60		**4304 40.100**

Product information

- sealed, suitable for coolant pressure up to 100 bar thanks to the application of IC clamping nuts and suitable sealing washer
- balancing quality: G2.5 / 25.000 rev./min or U< 1 gmm
- HSK-A to ISO 12164-1/DIN 69893-1
- for collet chucks with adjustment angle 8° according to DIN ISO 15488

Scope of delivery

- incl. IC retaining nut article no. 4306 and adjustment screw article no. 4902

- order sealing washer, article no. 4335, collet, article no. 4307, clamping key, article no. 4913 and coolant supply set article no. 4949 separately

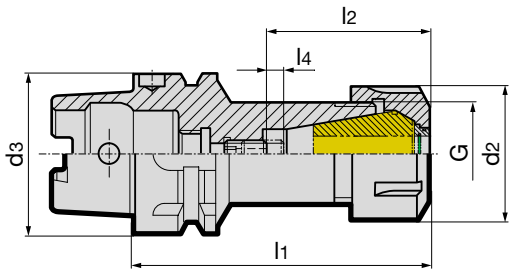

									Article no.	4324
HSK-A d_3	clamping range	d_2 mm	G	l_1 mm	l_2 mm	l_4 mm	incl. adjustment screw art. no. 4902...	kg		Order no.
32	ER 16 Ø 0.5-10.0	28	M22 x 1.5	85	39	6	16.012	0.30		**4324 16.032**
32	ER 20 Ø 0.5-13.0	34	M25 x 1.5	75	45	8	16.012	0.30		**4324 20.032**
40	ER 16 Ø 0.5-10.0	28	M22 x 1.5	85	39	6	16.012	0.40		**4324 16.040**
40	ER 25 Ø 0.5-16.0	42	M32 x 1.5	85	49	8	25.014	0.50		**4324 25.040**
40	ER 32 Ø 1.0-20.0	50	M40 x 1.5	105	55	10	32.020	0.80		**4324 32.040**
50	ER 16 Ø 0.5-10.0	28	M22 x 1.5	105	39	6	16.012	0.70		**4324 16.050**
50	ER 25 Ø 0.5-16.0	42	M32 x 1.5	105	49	8	25.014	0.90		**4324 25.150**
50	ER 25 Ø 0.5-16.0	42	M32 x 1.5	85	49	6	25.014	1.00		**4324 25.050**
50	ER 32 Ø 1.0-20.0	50	M40 x 1.5	105	55	10	32.020	1.00		**4324 32.050**
63	ER 16 Ø 0.5-10.0	28	M22 x 1.5	105	39	6	16.012	0.90		**4324 16.063**
63	ER 16 Ø 0.5-10.0	28	M22 x 1.5	165	39	6	16.012	1.20		**4324 16.163**
63	ER 25 Ø 0.5-16.0	42	M32 x 1.5	85	47	6	25.014	1.00		**4324 25.063**
63	ER 25 Ø 0.5-16.0	42	M32 x 1.5	105	47	6	25.014	1.20		**4324 25.163**
63	ER 32 Ø 1.0-20.0	50	M40 x 1.5	105	55	10	32.020	1.40		**4324 32.063**
63	ER 40 Ø 3.0-26.0	63	M50 x 1.5	125	61	10	32.020	1.90		**4324 40.063**
80	ER 32 Ø 1.0-20.0	50	M40 x 1.5	105	55	10	32.020	1.90		**4324 32.080**
80	ER 32 Ø 1.0-20.0	50	M40 x 1.5	165	55	10	32.020	2.80		**4324 32.180**
80	ER 40 Ø 3.0-26.0	63	M50 x 1.5	125	61	10	32.020	2.80		**4324 40.080**
100	ER 32 Ø 1.0-20.0	50	M40 x 1.5	105	55	10	32.020	2.80		**4324 32.100**
100	ER 32 Ø 1.0-20.0	50	M40 x 1.5	165	55	10	32.020	3.70		**4324 32.101**
100	ER 40 Ø 3.0-26.0	63	M50 x 1.5	125	61	10	32.020	3.70		**4324 40.100**

Product information

- balancing quality: G2.5 / 25.000 rev./min or U< 1 gmm
- HSK-C to ISO 12164-1/DIN 69893-1
- for collet chucks with adjustment angle 8° according to DIN ISO 15488

Scope of delivery

- incl. retaining nut article no. 4306 and adjustment screw article no. 4901
- order collet, article no. 4307, clamping key, article no. 4913 separately

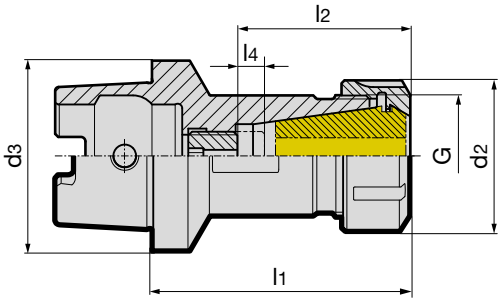

									Article no.	4303
HSK-C d_3	clamping range	d_2 mm	G	l_1 mm	l_2 mm	l_4 mm	incl. adjustment screw art. no. 4901...	kg		Order no.
25	ER16 mini Ø 0.5-10.0	22	M19 x 1.0	50	30	3	16.012	0.10		**4303 16.025**
32	ER 16 Ø 0.5-10.0	28	M22 x 1.5	55	32	4	16.012	0.20		**4303 16.032**
32	ER 20 Ø 0.5-13.0	34	M25 x 1.5	60	38	6	16.012	0.30		**4303 20.032**
32	ER 25 Ø 0.5-16.0	42	M32 x 1.5	70	44	6	25.014	0.40		**4303 25.032**
40	ER 20 Ø 0.5-13.0	34	M25 x 1.5	60	38	6	16.012	0.40		**4303 20.040**
40	ER 25 Ø 0.5-16.0	42	M32 x 1.5	70	44	8	25.014	0.50		**4303 25.040**
40	ER 32 Ø 1.0-20.0	50	M40 x 1.5	75	49	8	25.014	0.60		**4303 32.040**
50	ER 16 Ø 0.5-10.0	28	M22 x 1.5	60	34	6	16.012	0.40		**4303 16.050**
50	ER 25 Ø 0.5-16.0	42	M32 x 1.5	70	44	8	25.014	0.70		**4303 25.050**
50	ER 32 Ø 1.0-20.0	50	M40 x 1.5	75	49	8	25.014	0.90		**4303 32.050**
50	ER 40 Ø 3.0-26.0	63	M50 x 1.5	80	54	8	25.014	1.00		**4303 40.050**
63	ER 40 Ø 3.0-26.0	63	M50 x 1.5	80	54	8	25.014	1.50		**4303 40.063**

Product information

- sealed, suitable for coolant pressure up to 100 bar thanks to the application of IC clamping nuts and suitable sealing washer
- balancing quality: G2.5 / 25.000 rev./min or U< 1 gmm
- HSK-C to ISO 12164-1/DIN 69893-1
- for collet chucks with adjustment angle 8° according to DIN ISO 15488

Scope of delivery

- incl. IC retaining nut article no. 4306 and adjustment screw article no. 4901

- order sealing washer, article no. 4335, collet, article no. 4307, clamping key, article no. 4913 separately

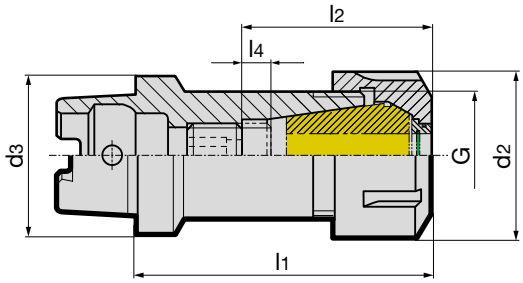

									Article no.	4323
HSK-C d_3	clamping range	d_2 mm	G	l_1 mm	l_2 mm	l_4 mm	incl. adjustment screw art. no. 4901...	kg		Order no.
25	ER16 mini Ø 1.0-10.0	22	M19 x 1.0	55	35	3	16.012	0.10		**4323 16.025**
32	ER 16 Ø 0.5-10.0	28	M22 x 1.5	60	37	4	16.012	0.20		**4323 16.032**
32	ER 20 Ø 0.5-13.0	34	M25 x 1.5	65	43	6	16.012	0.30		**4323 20.032**
32	ER 25 Ø 0.5-16.0	42	M32 x 1.5	75	49	8	25.014	0.40		**4323 25.032**
40	ER 20 Ø 0.5-13.0	34	M25 x 1.5	65	43	6	16.012	0.40		**4323 20.040**
40	ER 25 Ø 0.5-16.0	42	M32 x 1.5	75	49	8	25.014	0.60		**4323 25.040**
40	ER 32 Ø 1.0-20.0	50	M40 x 1.5	80	54	8	25.014	0.60		**4323 32.040**
50	ER 16 Ø 0.5-10.0	28	M22 x 1.5	65	39	6	16.012	0.40		**4323 16.050**
50	ER 25 Ø 0.5-16.0	42	M32 x 1.5	75	49	8	25.014	0.70		**4323 25.050**
50	ER 32 Ø 1.0-20.0	50	M40 x 1.5	80	54	8	25.014	0.90		**4323 32.050**
50	ER 40 Ø 3.0-26.0	63	M50 x 1.5	85	59	8	25.014	1.10		**4323 40.050**
63	ER 40 Ø 3.0-26.0	63	M50 x 1.5	85	59	8	25.014	1.50		**4323 40.063**

Product information

- balancing quality: G2.5 / 25,000 rev./min or < 1 gmm residual imbalance
- incl. spanner flat for locking during clamping
- Order no. 16,025 without length adjustment and central cooling
- HSK-E according to DIN 69893-5 with access hole in taper for manual tool change
- for collet chucks with adjustment angle 8° according to DIN ISO 15488

Scope of delivery

- incl. retaining nut article no. 4306 and adjustment screw article no. 4902
- order collet, article no. 4307, clamping key, article no. 4913 and coolant supply set, article no. 4949 separately

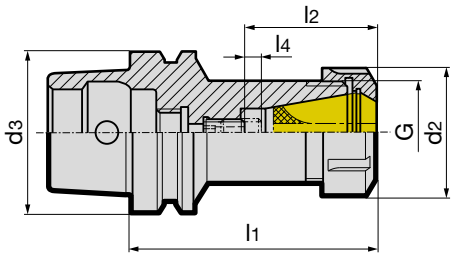

									Article no.	4397
HSK-E d_3	clamping range	d_2 mm	G	l_1 mm	l_2 mm	l_4 mm	incl. adjustment screw art. no. 4902...	kg		Order no.
25	ER 16 mini Ø 0.5-10.0	22	M19 x 1.0	43	-	-	-	0.10		**4397 16.025**
32	ER 16 mini Ø 0.5-10.0	22	M19 x 1.0	60	34	6	16.010	0.20		**4397 16.032**
32	ER 20 mini Ø 0.5-13.0	28	M24 x 1.0	60	34	4	16.010	0.30		**4397 20.032**
40	ER 16 Ø 0.5-10.0	28	M22 x 1.5	60	32	4	16.010	0.30		**4397 16.040**
40	ER 20 mini Ø 0.5-13.0	28	M24 x 1.0	65	37	6	16.010	0.30		**4397 20.040**
40	ER 25 mini Ø 0.5-16.0	35	M30 x 1.0	80	44	8	25.014	0.50		**4397 25.040**
50	ER 16 Ø 0.5-10.0	28	M22 x 1.5	100	34	6	16.012	0.80		**4397 16.050**
50	ER 20 Ø 0.5-13.0	34	M25 x 1.5	70	38	6	16.010	0.60		**4397 20.050**
50	ER 25 Ø 0.5-16.0	42	M32 x 1.5	80	44	8	25.014	0.80		**4397 25.050**
50	ER 32 Ø 1.0-20.0	50	M40 x 1.5	100	50	10	32.020	1.00		**4397 32.050**
63	ER 32 Ø 1.0-20.0	50	M40 x 1.5	90	50	10	25.014	1.30		**4397 32.063**
63	ER 40 Ø 3.0-26.0	63	M50 x 1.5	120	56	10	32.020	1.80		**4397 40.063**

ISO taper collet holders

Product information
- balancing quality: G6.3 / 15,000 rev./min
- ISO taper to DIN ISO 7388-1 form AD/AF
- for collet chucks with adjustment angle 8° according to DIN ISO 15488

Scope of delivery
- incl. retaining nut

- order collet, article no. 4307, separately
- order clamping key, article no. 4913, separately
- order pull studs, article no. 4925 or 4926, separately

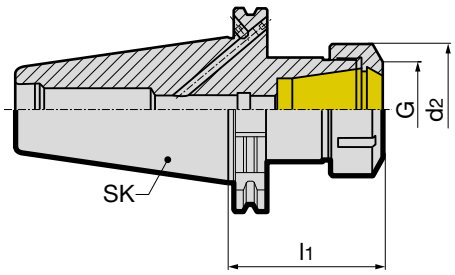

				Article no.	4318
ISO taper	clamping range	d_2 mm	G	l_1 mm	Order no.
40	ER16 Ø 0.5-10.0	32	M22 x 1.5	63	**4318 16.040**
40	ER25 Ø 0.5-16.0	42	M32 x 1.5	60	**4318 25.040**
40	ER32 Ø 1.0-20.0	50	M40 x 1.5	70	**4318 32.040**
40	ER16 Ø 0.5-10.0	32	M22 x 1.5	160	**4318 16.140**
40	ER25 Ø 0.5-16.0	42	M32 x 1.5	160	**4318 25.140**
40	ER32 Ø 1.0-20.0	50	M40 x 1.5	160	**4318 32.140**
50	ER25 Ø 0.5-16.0	42	M32 x 1.5	60	**4318 25.050**
50	ER32 Ø 1.0-20.0	50	M40 x 1.5	70	**4318 32.050**
50	ER40 Ø 3.0-26.0	63	M50 x 1.5	80	**4318 40.050**
50	ER25 Ø 0.5-16.0	42	M32 x 1.5	160	**4318 25.150**
50	ER40 Ø 3.0-26.0	63	M50 x 1.5	160	**4318 40.150**

MAS/BT collet holders

Product information
- balancing quality: G6.3 / 15,000 rev./min
- MAS/BT to DIN ISO 7388-2 form JD/JF
- coolant supply form JD/JF (* BT30 version JD without coolant supply over collar)
- for collet chucks with adjustment angle 8° according to DIN ISO 15488

Scope of delivery
- incl. retaining nut

- order collet, article no. 4307, separately
- order clamping key, article no. 4913, separately

- BT50 on request
- order pull studs, article no. 4927 or 4928, separately

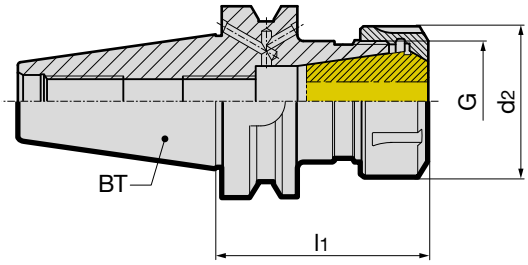

				Article no.	4245
BT	clamping range	d_2 mm	G	l_1 mm	Order no.
30*	ER16 0.5-10.0	32	M22x1.5	70	**4245 16.030**
30*	ER25 0.5-16.0	42	M32x1.5	70	**4245 25.030**
40	ER16 0.5-10.0	32	M22x1.5	63	**4245 16.040**
40	ER25 0.5-16.0	42	M32x1.5	60	**4245 25.040**
40	ER32 1.0-20.0	50	M40x1.5	70	**4245 32.040**
40	ER16 0.5-10.0	32	M22x1.5	160	**4245 16.140**
40	ER25 0.5-16.0	42	M32x1.5	160	**4245 25.140**
40	ER32 1.0-20.0	50	M40x1.5	160	**4245 32.140**

Product information

- for clamping nuts
- Type A with special hook key for clamping nuts System DIN 6499 mini design
- Type B for clamping nuts with hexagonal design
- Type C for clamping nuts for external slots

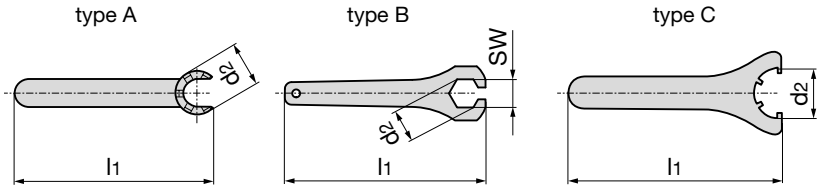

					Article no.	4913
nom. size mm	type	l_1 mm	for ER d_2 mm	SW		Order no.
ER16 mini	A	122	22	-		**4913 16.200**
ER20 mini	A	139	28	-		**4913 20.200**
ER25 mini	A	143	35	-		**4913 25.200**
ER11	B	141	19	17		**4913 11.000**
ER16	B	178	28	25		**4913 16.000**
ER16	C	161	32	-		**4913 16.032**
ER20	B	200	34	30		**4913 20.000**
ER20	C	183	35	-		**4913 20.100**
ER25	C	210	42	-		**4913 25.000**
ER32	C	250	50	-		**4913 32.000**
ER40	C	290	63	-		**4913 40.000**

Adjustment screws for HSK-A/HSK-E collet holders

Product information

- for dimensions without d1 the screw is designed without spigot

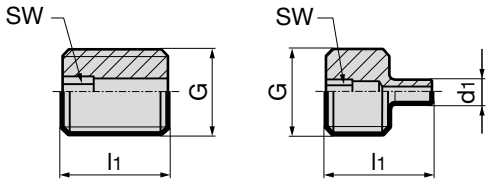

					Article no.	4902
for nom. size	for clamping range	G	d_1 mm	l_1 mm	SW	Order no.
ER11	2- 7	M6	–	12	3	**4902 11.012**
ER16	2- 6	M10	3.5	18	3	**4902 16.018**
ER16	6-10	M10	–	12	3	**4902 16.012**
ER16	6- 10	M10	–	10	3	**4902 16.010**
ER20	2,5- 6	M10	4.5	24	3	**4902 20.024**
ER20	6-10	M10	5.5	18	3	**4902 20.018**
ER20	10-13	M10	–	12	3	**4902 16.012**
ER25	2,5- 7	M16	4.5	26	4	**4902 25.026**
ER25	7-10	M16	6.5	20	4	**4902 25.020**
ER25	10-17	M16	–	14	4	**4902 25.014**
ER32	3,5-10	M16	6.5	36	5	**4902 32.036**
ER32	10-16	M16	9.5	28	5	**4902 32.028**
ER32	16-22	M16	–	20	5	**4902 32.020**
ER40	3- 8	M16	6.5	44	5	**4902 40.044**
ER40	8-10	M16	6.5	36	5	**4902 32.036**
ER40	10-16	M16	9.5	28	5	**4902 32.028**
ER40	16-30	M16	–	20	5	**4902 32.020**

Adjustment screws for HSK-C collet holders

Product information

- for dimensions without d1 the screw is designed without spigot

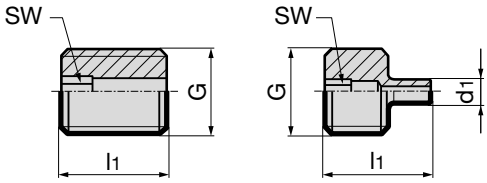

					Article no.	4901
for nom. size	for clamping range	G	d_1 mm	l_1 mm	SW	Order no.
ER16	2- 6	M10	3.5	16	3	**4901 16.016**
ER16	6-10	M10	–	12	3	**4901 16.012**
ER20	2,5- 6	M10	4.5	20	3	**4901 20.020**
ER20	6-10	M10	5.5	16	3	**4901 20.016**
ER20	10-13	M10	–	12	3	**4901 16.012**
ER25	2,5- 7	M16	4.5	26	4	**4901 25.026**
ER25	7-10	M16	6.5	20	4	**4901 25.020**
ER25	10-17	M16	–	14	4	**4901 25.014**
ER32	3- 7	M16	6.5	32	5	**4901 32.032**
ER32	7-10	M16	6.5	26	5	**4901 32.026**
ER32	10-16	M16	9.5	20	5	**4901 32.020**
ER32	16-22	M16	–	14	4	**4901 25.014**
ER40	3- 6	M16	6.5	38	5	**4901 40.038**
ER40	6- 8	M16	6.5	32	5	**4901 32.032**
ER40	8-10	M16	6.5	26	5	**4901 32.026**
ER40	10-16	M16	9.5	20	5	**4901 32.020**
ER40	16-30	M16	–	14	4	**4901 25.014**

Product information

- the clamping range of collet, article no. 4307, is to be applied as indicated. For intermediate sizes as i.e. for Ø 6.3 mm (nom. size ER20) order collet d1 = 7.0 mm - 6.0 mm (Order no. 7.020)
- concentricity error max. 10 µm

clamping range:
ER11: Ø 0.5 - Ø 7.0
ER16: Ø 0.5 - Ø 10.0
ER20: Ø 0.5 - Ø 13.0
ER25: Ø 0.5 - Ø 16.0
ER32: Ø 0.5 - Ø 20.0
ER40: Ø 0.5 - Ø 26.0

Ordering example:

Ø d1	= 2.5
nom. size	= ER 20
article no./Order no.	= 4307 02,520
(d1 = 7.0 mm - 6.0 mm)	

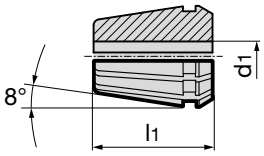

			Article no. 4307
nom. size	for clamping range d_1 mm	l_1 mm	Order no.
ER11 (4008E)	1.0-0.5	18.0	4307 1.011
ER11 (4008E)	1.5-1.0	18.0	4307 1.511
ER11 (4008E)	2.0-1.5	18.0	4307 2.011
ER11 (4008E)	2.5-2.0	18.0	4307 2.511
ER11 (4008E)	3.0-2.5	18.0	4307 3.011
ER11 (4008E)	4.0-3.5	18.0	4307 4.011
ER11 (4008E)	5.0-4.5	18.0	4307 5.011
ER11 (4008E)	6.0-5.5	18.0	4307 6.011
ER11 (4008E)	7.0-6.5	18.0	4307 7.011
ER16 (426E)	1.0-0.5	27.5	4307 1.016
ER16 (426E)	1.5-1.0	27.5	4307 1.516
ER16 (426E)	2.0-1.0	27.5	4307 2.016
ER16 (426E)	2.5-1.5	27.5	4307 2.516
ER16 (426E)	3.0-2.0	27.5	4307 3.016
ER16 (426E)	4.0-3.0	27.5	4307 4.016
ER16 (426E)	5.0-4.0	27.5	4307 5.016
ER16 (426E)	6.0-5.0	27.5	4307 6.016
ER16 (426E)	7.0-6.0	27.5	4307 7.016
ER16 (426E)	8.0-7.0	27.5	4307 8.016
ER16 (426E)	9.0-8.0	27.5	4307 9.016
ER16 (426E)	10.0-9.0	26.0	4307 10.016
ER20 (428E)	1.0-0.5	31.5	4307 1.020
ER20 (428E)	1.5-1.0	31.5	4307 1.520
ER20 (428E)	2.0-1.0	31.5	4307 2.020
ER20 (428E)	2.5-1.5	31.5	4307 2.520
ER20 (428E)	3.0-2.0	31.5	4307 3.020
ER20 (428E)	4.0-3.0	31.5	4307 4.020
ER20 (428E)	5.0-4.0	31.5	4307 5.020
ER20 (428E)	6.0-5.0	31.5	4307 6.020
ER20 (428E)	7.0-6.0	31.5	4307 7.020
ER20 (428E)	8.0-7.0	31.5	4307 8.020
ER20 (428E)	9.0-8.0	31.5	4307 9.020
ER20 (428E)	10.0-9.0	31.5	4307 10.020
ER20 (428E)	11.0-10.0	31.5	4307 11.020
ER20 (428E)	12.0-11.0	31.5	4307 12.020
ER20 (428E)	13.0-12.0	31.5	4307 13.020
ER25 (430E)	1.0-0.5	34.0	4307 1.025
ER25 (430E)	1.5-1.0	34.0	4307 1.525
ER25 (430E)	2.0-1.0	34.0	4307 2.025
ER25 (430E)	2.5-1.5	34.0	4307 2.525
ER25 (430E)	3.0-2.0	34.0	4307 3.025
ER25 (430E)	4.0-3.0	34.0	4307 4.025
ER25 (430E)	5.0-4.0	34.0	4307 5.025
ER25 (430E)	6.0-5.0	34.0	4307 6.025
ER25 (430E)	7.0-6.0	34.0	4307 7.025
ER25 (430E)	8.0-7.0	34.0	4307 8.025

			Article no.	4307
nom. size	for clamping range d_1 mm	l_1 mm		Order no.
ER25 (430E)	9.0-8.0	34.0		4307 9.025
ER25 (430E)	10.0-9.0	34.0		4307 10.025
ER25 (430E)	11.0-10.0	34.0		4307 11.025
ER25 (430E)	12.0-11.0	34.0		4307 12.025
ER25 (430E)	13.0-12.0	34.0		4307 13.025
ER25 (430E)	14.0-13.0	34.0		4307 14.025
ER25 (430E)	15.0-14.0	34.0		4307 15.025
ER25 (430E)	16.0-15.0	34.0		4307 16.025
ER32 (470E)	2.0-1.0	40.0		4307 2.032
ER32 (470E)	2.5-1.5	40.0		4307 2.532
ER32 (470E)	3.0-2.0	40.0		4307 3.032
ER32 (470E)	4.0-3.0	40.0		4307 4.032
ER32 (470E)	5.0-4.0	40.0		4307 5.032
ER32 (470E)	6.0-5.0	40.0		4307 6.032
ER32 (470E)	7.0-6.0	40.0		4307 7.032
ER32 (470E)	8.0-7.0	40.0		4307 8.032
ER32 (470E)	9.0-8.0	40.0		4307 9.032
ER32 (470E)	10.0-9.0	40.0		4307 10.032
ER32 (470E)	11.0-10.0	40.0		4307 11.032
ER32 (470E)	12.0-11.0	40.0		4307 12.032
ER32 (470E)	13.0-12.0	40.0		4307 13.032
ER32 (470E)	14.0-13.0	40.0		4307 14.032
ER32 (470E)	15.0-14.0	40.0		4307 15.032
ER32 (470E)	16.0-15.0	40.0		4307 16.032
ER32 (470E)	17.0-16.0	40.0		4307 17.032
ER32 (470E)	18.0-17.0	40.0		4307 18.032
ER32 (470E)	19.0-18.0	40.0		4307 19.032
ER32 (470E)	20.0-19.0	40.0		4307 20.032
ER40 (472E)	4.0-3.0	46.0		4307 4.040
ER40 (472E)	5.0-4.0	46.0		4307 5.040
ER40 (472E)	6.0-5.0	46.0		4307 6.040
ER40 (472E)	7.0-6.0	46.0		4307 7.040
ER40 (472E)	8.0-7.0	46.0		4307 8.040
ER40 (472E)	9.0-8.0	46.0		4307 9.040
ER40 (472E)	10.0-9.0	46.0		4307 10.040
ER40 (472E)	11.0-10.0	46.0		4307 11.040
ER40 (472E)	12.0-11.0	46.0		4307 12.040
ER40 (472E)	13.0-12.0	46.0		4307 13.040
ER40 (472E)	14.0-13.0	46.0		4307 14.040
ER40 (472E)	15.0-14.0	46.0		4307 15.040
ER40 (472E)	16.0-15.0	46.0		4307 16.040
ER40 (472E)	17.0-16.0	46.0		4307 17.040
ER40 (472E)	18.0-17.0	46.0		4307 18.040
ER40 (472E)	19.0-18.0	46.0		4307 19.040
ER40 (472E)	20.0-19.0	46.0		4307 20.040
ER40 (472E)	21.0-20.0	46.0		4307 21.040
ER40 (472E)	22.0-21.0	46.0		4307 22.040
ER40 (472E)	23.0-22.0	46.0		4307 23.040
ER40 (472E)	24.0-23.0	46.0		4307 24.040
ER40 (472E)	25.0-24.0	46.0		4307 25.040
ER40 (472E)	26.0-25.0	46.0		4307 26.040

Product information

- DIN ISO 15488
- for application without sealing washer
- concentricity error max. 6 µm
- for high-performance tools with internal cooling e.g. HR 500 reamers
- metallic sealed up to 300 bar coolant pressure
- ER-DM collets with restricted clamping range
- The tool must be clamped flush, or deeper into the collet chuck. A minimum clamping length of 2/3 as for standard collet chucks is not possible as there would be no other sealing.

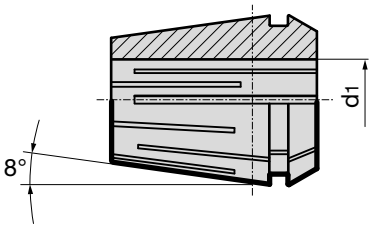

	Article no.	4175
nom. size	clamping range $d_{1\ h9}$	**Order no.**
ER20	3.00	**4175 3.020**
ER20	4.00	**4175 4.020**
ER20	5.00	**4175 5.020**
ER20	6.00	**4175 6.020**
ER20	7.00 - 6.50	**4175 7.020**
ER20	8.00 - 7.50	**4175 8.020**
ER20	9.00 - 8.50	**4175 9.020**
ER20	10.00 - 9.50	**4175 10.020**
ER20	11.00 - 10.50	**4175 11.020**
ER20	12.00 - 11.50	**4175 12.020**
ER20	13.00 - 12.50	**4175 13.020**
ER25	6.00	**4175 6.025**
ER25	8.00 - 7.50	**4175 8.025**
ER25	10.00 - 9.50	**4175 10.025**
ER25	12.00 - 11.50	**4175 12.025**
ER25	14.00 - 13.50	**4175 14.025**
ER25	16.00 - 15.50	**4175 16.025**
ER32	6.00	**4175 6.032**
ER32	8.00 - 7.50	**4175 8.032**
ER32	10.00 - 9.50	**4175 10.032**
ER32	12.00 - 11.50	**4175 12.032**
ER32	14.00 - 13.50	**4175 14.032**
ER32	16.00 - 15.50	**4175 16.032**
ER32	18.00 - 17.50	**4175 18.032**
ER32	20.00 - 19.50	**4175 20.032**

Product information

- for collets DIN ISO 15488
- for application with internal cooling IC/ER for sealing washer
- for increased clamping version ER or IC/ER with glide ring
- suitable for up to 150 bar coolant pressure

Scope of delivery

- version for internal cooling IC/ER: order sealing washer article no. 4335 separately
- IC/ER versions for internal cooling

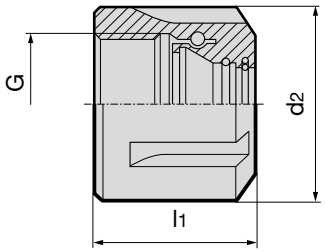

						Article no.	4306
for sealing washer no. 4335	with glide ring	nom. size	d_2 mm	l_1 mm	G	max. torque Nm	Order no.
–	–	ER16 mini	22	18.0	M19x1.0	55	**4306 16.200**
–	–	ER20 mini	28	19.0	M24x1.0	75	**4306 20.200**
–	–	ER25 mini	35	20.0	M30x1.0	100	**4306 25.200**
–	–	ER11 (4008E)	19	11.3	M14x0.75	25	**4306 11.000**
–	–	ER16 (426E)	28	17.5	M22x1.5	55	**4306 16.000**
–	–	ER20 (428E)	34	19.0	M25x1.5	75	**4306 20.000**
–	–	ER25 (430E)	42	20.0	M32x1.5	100	**4306 25.000**
–	–	ER32 (470E)	50	22.5	M40x1.5	140	**4306 32.000**
–	–	ER40 (472E)	63	25.5	M50x1.5	200	**4306 40.000**
x	–	IC/ER16 mini	22	22.0	M19x1.0	55	**4306 16.300**
x	–	IC/ER20 mini	28	24.0	M24x1.0	75	**4306 20.300**
x	–	IC/ER25 mini	35	25.0	M30x1.0	100	**4306 25.300**
x	–	IC/ER16	28	22.5	M22x1.5	55	**4306 16.600**
x	–	IC/ER20	34	24.0	M25x1.5	75	**4306 20.600**
x	–	IC/ER25	42	25.0	M32x1.5	100	**4306 25.600**
x	–	IC/ER32	50	27.5	M40x1.5	140	**4306 32.600**
x	–	IC/ER40	63	30.5	M50x1.5	200	**4306 40.600**
–	x	ER16	28	20.3	M22x1.5	55	**4306 16.400**
–	x	ER20	34	21.8	M25x1.5	75	**4306 20.400**
–	x	ER25	42	22.4	M32x1.5	100	**4306 25.400**
–	x	ER32	50	25.0	M40x1.5	140	**4306 32.400**
–	x	ER40	63	28.3	M50x1.5	200	**4306 40.400**
x	x	IC/ER16	28	22.7	M22x1.5	55	**4306 16.500**
x	x	IC/ER20	34	24.2	M25x1.5	75	**4306 20.500**
x	x	IC/ER25	42	25.2	M32x1.5	100	**4306 25.500**
x	x	IC/ER32	50	27.4	M40x1.5	140	**4306 32.500**
x	x	IC/ER40	63	30.7	M50x1.5	200	**4306 40.500**

Sealing washers

Product information

- the application range of sealing washer, article no. 4325, is from nom.-Ø d1 to the next dimension below, i.e. for Ø 6.3 mm (nom. size ER20) order sealing washer d1 = 6.5 mm (Order no. 6.520).
- suitable for up to 150 bar coolant pressure

Ordering example

Ø d1	= 3.5
nom. size	= ER 20
article no./Order no.	= 4335 3.520

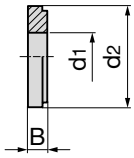

				Article no.	4335
nom. size	d_1 mm	d_2 mm	B mm		Order no.
ER16	3.0…10 increasing by 0.5 mm	13	4		**4335 3.016 - 10.016**
ER20	3.0…13 increasing by 0.5 mm	16	4		**4335 3.020 - 13.020**
ER25	3.0…16 increasing by 0.5 mm	21	4		**4335 3.025 - 16.025**
ER32	3.0…20 increasing by 0.5 mm	27	4		**4335 3.032 - 20.032**
ER40	3.5…26 increasing by 0.5 mm	33.5	4		**4335 3.540 - 26.040**

HSK-A drilling chucks with internal cooling

Product information

- for clamping all straight shank tools
- HSK-A to ISO 12164-1/DIN 69893-1
- continuous Ø-range
- high clamping force thanks to robust worm gear
- max. coolant pressure up to 50 bar
- limit speed 20,000 rpm
- balancing quality: G2,5 / 20.000 rev./min

Scope of delivery

- incl. clamping key
- order coolant supply set, article no. 4949 separately

GÜHROJET

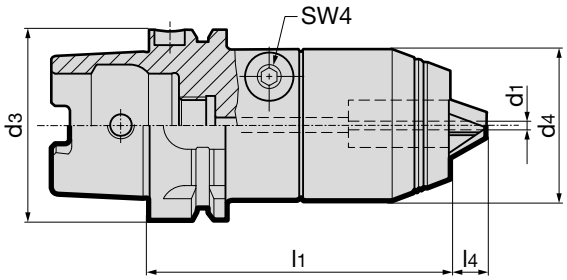

						Article no.	4346
HSK-A d_3	clamping range d_1 mm	d_4 mm	l_1 mm	l_4 mm	kg		Order no.
50	1-16	50	107	12	1.60		**4346 16.050**
63	1-16	50	98	12	1.90		**4346 16.063**
80	1-16	50	101	12	2.70		**4346 16.080**
100	1-16	50	104	12	3.30		**4346 16.100**

ISO taper drilling chucks with internal cooling

Product information
- for clamping all straight shank tools
- ISO taper to DIN ISO 7388-1 form AD
- continuous Ø-range
- high clamping force thanks to robust worm gear
- max. coolant pressure up to 50 bar
- limit speed 20,000 rpm
- balancing quality: G2,5 / 20.000 rev./min

Scope of delivery
- incl. clamping key
- order pull studs article no. 4925 or 4926 separately

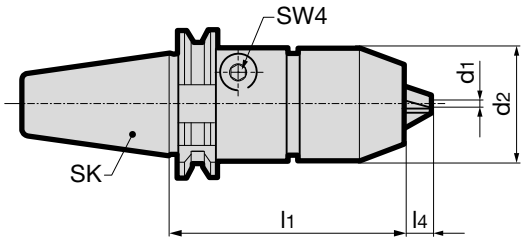

GÜHROJET

				Article no.	4242
ISO taper	clamping range d_1 mm	d_2 mm	l_1 mm	l_4 mm	Order no.
40	1.00 - 16.00	50	80	12	**4242 16.040**
50	1.00 - 16.00	50	80	12	**4242 16.050**

MAS/BT drilling chucks with internal cooling

Product information
- for clamping all straight shank tools
- MAS/BT to DIN ISO 7388-2 form JD
- continuous Ø-range
- high clamping force thanks to robust worm gear
- max. coolant pressure up to 50 bar
- limit speed 20,000 rpm
- balancing quality: G2,5 / 20.000 rev./min

Scope of delivery
- incl. clamping key
- order pull studs article no. 4927 or 4928 separately

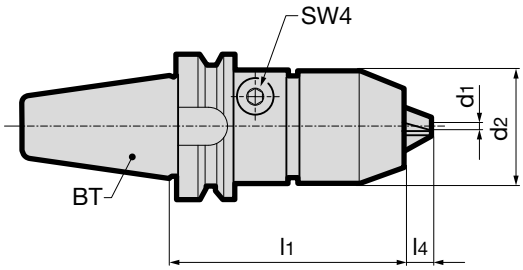

GÜHROJET

				Article no.	4240
MAS/BT	clamping range d_1 mm	d_2 mm	l_1 mm	l_4 mm	Order no.
30	0.5 - 10	45	72	9	**4240 10.030**
40	1 - 16	50	88	12	**4240 16.040**
50	1 - 16	50	99	12	**4240 16.050**

Product information

- HSK-A to ISO 12164-1/DIN 69893-1
- to hold face milling cutters
- balancing quality: G6.3 / 15,000 rev./min
- to DIN 69882-3
- for centralised or decentralised internal cooling, therefore process and tool life improvement
- bore-Ø 40 mm has four additional holes with internal thread for milling heads with tool attachment DIN 2079 and increased tight fitting diameter d2
- incl. balancing thread 6xM6

Scope of delivery

- incl. milling retainer screw article no. 4908 and driving keys
- order coolant supply set article no. 4949 separately

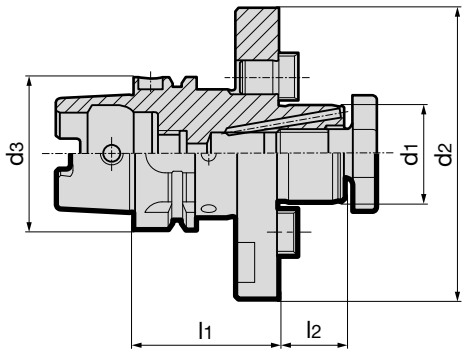

GÜHROJET

					Article no.	4362
HSK-A d_3	arbor-Ø d_1 h6 mm	d_2 mm	l_1 mm	l_2 mm	kg	Order no.
63	22	50	50	19	1.1	**4362 22.063**
63	27	60	60	21	1.3	**4362 27.063**
63	32	78	60	24	1.5	**4362 32.063**
63	40	120	60	27	2.7	**4362 40.063**
63	40	89	60	27	2.7	**4362 140.063**
80	27	60	50	21	1.8	**4362 27.080**
80	32	78	50	24	2.1	**4362 32.080**
80	40	120	60	27	3.3	**4362 40.080**
80	40	89	60	27	3.3	**4362 140.080**
80	60	160	70	40	6.3	**4362 60.080**
100	27	60	50	21	2.9	**4362 27.100**
100	32	78	50	24	3.3	**4362 32.100**
100	40	120	60	27	4.2	**4362 40.100**
100	40	89	60	27	4.2	**4362 140.100**
100	60	160	70	40	7.2	**4362 60.100**

Product information
- to hold face milling cutters
- balancing quality: G6.3 / 15,000 rev./min
- ISO taper to DIN ISO 7388-1 form AD/AF
- for centralised or decentralised internal cooling, therefore process and tool life improvement
- coolant supply form AD/AF
- bore-Ø 40 mm has four additional holes with internal thread for milling heads with tool attachment DIN 2079 and increased tight fitting diameter d2

Scope of delivery
- incl. milling retainer screw, article no. 4908, and driving keys
- order pull studs, article no. 4925 or 4926, separately

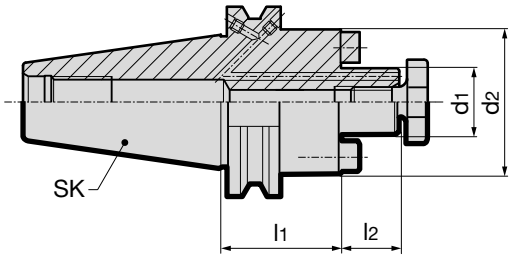

GÜHROJET

					Article no.	4231
ISO taper	arbor-Ø d_1 h6 mm	d_2 mm	l_1 mm	l_2 mm		Order no.
40	16	38	35	17		**4231 16.040**
40	22	48	35	19		**4231 22.040**
40	27	58	40	21		**4231 27.040**
40	32	78	50	24		**4231 32.040**
40	40	88	50	27		**4231 40.040**
50	22	48	35	19		**4231 22.050**
50	27	58	40	21		**4231 27.050**
50	32	78	50	24		**4231 32.050**
50	40	88	50	27		**4231 40.050**

Product information

- to hold face milling cutters
- balancing quality: G6.3 / 15,000 rev./min
- MAS/BT to DIN ISO 7388-2 form JD/JF
- for centralised or decentralised internal cooling, therefore process and tool life improvement
- coolant supply form JD/JF (* BT30 version JD without coolant supply over collar and without GÜHROJET)
- clamping-Ø 40 with 4 additional tapped holes to hold milling heads with tool attachment DIN 2079 and larger contact-Ø d2

Scope of delivery

- incl. milling retainer screw, article no. 4908, and driving keys

- BT-50 on request
- order pull studs, article no. 4927 or 4928, separately

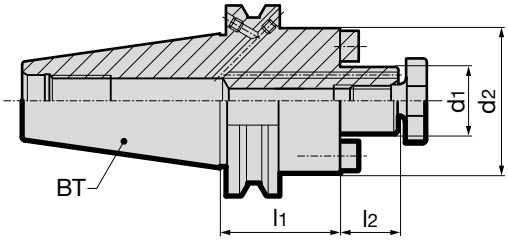

GÜHROJET

BT	arbor-Ø d_1 h6 mm	d_2 mm	l_1 mm	l_2 mm	Article no. 4230 Order no.
30*	16	38	40	17	**4230 16.030**
30*	22	48	40	19	**4230 22.030**
30*	27	58	40	21	**4230 27.030**
30*	32	78	50	24	**4230 32.030**
40	16	38	40	17	**4230 16.040**
40	22	48	40	19	**4230 22.040**
40	27	58	40	21	**4230 27.040**
40	32	78	50	24	**4230 32.040**
40	40	88	50	27	**4230 40.040**

Product information

- for the mounting of face milling cutters
- balancing quality: G6,3 / 15,000 rpm
- CAT according to ASME B5.50
- for central internal cooling
- coolant supply form AD/AF
- bore-Ø 40 mm has four additional holes with internal thread for milling heads with tool attachment DIN 2079 and increased tight fitting diameter d2

Scope of delivery

- incl. cylinder screw DIN EN ISO 4762 art. no. 4907
- incl. retaining screws art. no. 4908 and driving keys

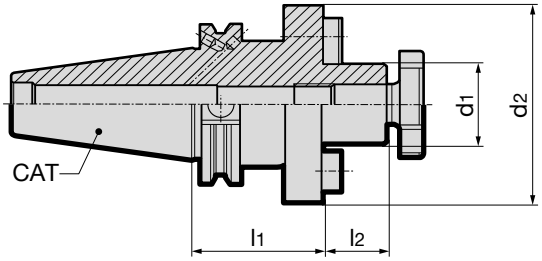

GÜHROJET

HSK-A d_3	arbor-Ø d_1 h6 mm	d_2 mm	l_1 mm	l_2 mm	kg	Article no. 4222 Order no.
40	16	38	35	17	1.03	**4222 16.040**
40	22	44	35	19	1.13	**4222 22.040**
40	27	50	40	21	1.43	**4222 27.040**
40	32	78	50	24	1.73	**4222 32.040**
40	40	89	50	27	2.23	**4222 40.040**
50	16	38	35	17	2.79	**4222 16.050**
50	22	48	35	19	2.89	**4222 22.050**
50	27	60	40	21	3.19	**4222 27.050**
50	32	78	50	24	3.81	**4222 32.050**
50	40	89	50	27	4.15	**4222 40.050**

HSK-A shell milling arbors

Product information

- to hold shell mills DIN 841, arbor-type single angle cutters DIN 842 with keyway, shell mills DIN 1880 with keyway an milling cutters with inserts DIN 1830
- bore-Ø 40 and 50 mm has four additional holes with internal thread for milling heads with tool attachment DIN 2079
- HSK-A to ISO 12164-1/DIN 69893-1
- for central coolant supply

Scope of delivery

- completely assembled with milling cutter retaining screw, article no. 4908, drive dogs, article no. 4922 and feather key article no. 4923
- order coolant supply set article no. 4949 separately

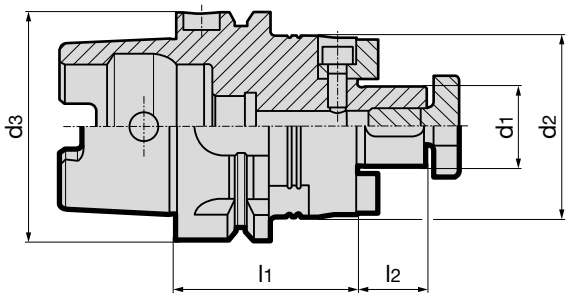

HSK-A d_3	arbor-Ø d_1 h6 mm	d_2 mm	l_1 mm	l_2 mm	kg	Article no. 4361 Order no.
32	16	40	45	17	0.27	**4361 16.032**
32	22	50	50	19	0.40	**4361 22.032**
40	16	40	45	17	0.40	**4361 16.040**
40	22	50	50	19	0.50	**4361 22.040**
50	16	40	45	17	0.60	**4361 16.050**
50	22	50	50	19	0.80	**4361 22.050**
50	27	60	55	21	1.00	**4361 27.050**
63	16	40	45	17	0.90	**4361 16.063**
63	22	50	50	19	1.00	**4361 22.063**
63	27	60	55	21	1.30	**4361 27.063**
63	32	78	55	24	1.60	**4361 32.063**
63	40	89	60	27	2.10	**4361 40.063**
80	16	40	45	17	2.10	**4361 16.080**
80	22	50	50	19	2.30	**4361 22.080**
80	27	60	55	21	2.50	**4361 27.080**
80	32	78	55	24	2.60	**4361 32.080**
80	40	89	60	27	3.40	**4361 40.080**
100	22	50	50	19	2.50	**4361 22.100**
100	27	60	55	21	2.80	**4361 27.100**
100	32	78	55	24	3.10	**4361 32.100**
100	40	89	60	27	3.70	**4361 40.100**
100	50	120	70	30	5.60	**4361 50.100**

Positioning of accessories

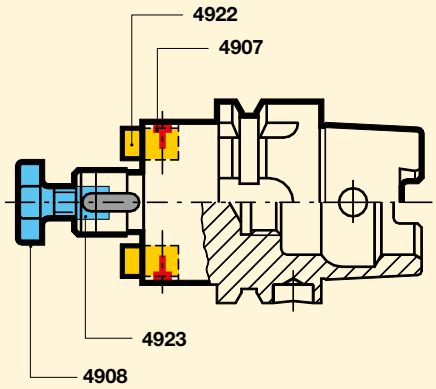

Feather keys DIN 6885 A

Scope of delivery

- minimum order quantity 10

for arbor-Ø mm	l_1 mm	b mm	Article no. 4923 Order no.
16	14	4	**4923 4.016**
22	16	6	**4923 6.022**
27	19	7	**4923 7.027**
32	22	8	**4923 8.032**
40	25	10	**4923 10.040**
50	28	12	**4923 12.050**

Drive dog sets for shell milling arbors

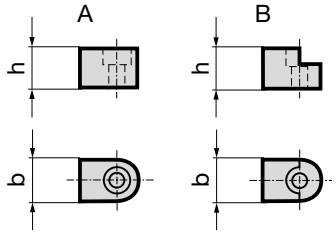

				Article no.	4922
for arbor-Ø mm	Form	h mm	b mm		Order no.
16	B	9.25	8		4922 16.000
22	B	11.00	10		4922 22.000
27	A	12.75	12		4922 27.000
32	A	16.50	14		4922 32.000
40	A	20.00	16		4922 40.000
50	A	27.50	18		4922 50.000

Screws DIN EN ISO 4762 (former DIN 912)

Scope of delivery

- minimum order quantity 10

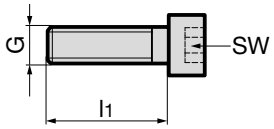

				Article no.	4907
G	l_1 mm	SW	strength		Order no.
M4	10	3	8.8		4907 4.100
M5	12	4	8.8		4907 5.120
M6	16	5	8.8		4907 6.160
M6	20	5	8.8		4907 6.200
M8	25	6	8.8		4907 8.250
M12	65	10	10.9		4907 12.650

Milling cutter retaining screws

Product information

- to DIN 6367
- on request with internal cooling

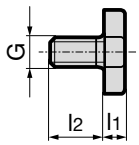

					Article no.	4908
for arbor-Ø mm	G	l_1 mm	l_2 mm	torque Nm		Order no.
16	M8	6	16	40		4908 16.000
22	M10	7	18	60		4908 22.000
27	M12	8	22	80		4908 27.000
32	M16	9	26	95		4908 32.000
40	M20	10	30	100		4908 40.000
50	M24	12	36	135		4908 50.000
60	M30	14	45	160		4908 60.000

Socket wrenches for retaining screws

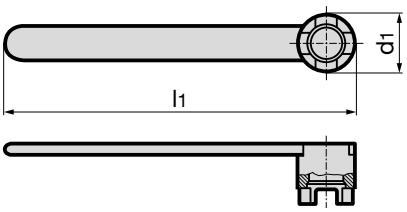

			Article no.	4909
for arbor-Ø mm	d_1 mm	l_1 mm		Order no.
16	22	180		4909 16.000
22	28	200		4909 22.000
27	35	225		4909 27.000
32	42	250		4909 32.000
40	52	280		4909 40.000
50	63	315		4909 50.000
60	76	355		4909 60.000

Product information

- for holding Morse tapers with tang to DIN 228-1 form B,
- HSK-A to ISO 12164-1/DIN 69893-1

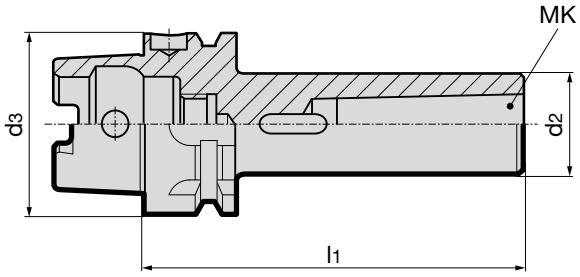

				Article no.	4320
HSK-A d_3 mm	MK	d_2 mm	l_1 mm	kg	Order no.
50	1	25	100	0.8	**4320 1.050**
50	2	32	120	0.8	**4320 2.050**
50	3	40	140	1.2	**4320 3.050**
63	1	25	100	0.9	**4320 1.063**
63	2	32	120	1.1	**4320 2.063**
63	3	40	140	1.5	**4320 3.063**
63	4	48	160	1.9	**4320 4.063**
80	1	25	110	1.5	**4320 1.080**
80	2	32	120	1.7	**4320 2.080**
80	3	40	150	2.0	**4320 3.080**
80	4	48	170	2.6	**4320 4.080**
100	1	25	110	2.3	**4320 1.100**
100	2	32	120	2.5	**4320 2.100**
100	3	40	150	2.8	**4320 3.100**
100	4	48	170	4.2	**4320 4.100**
100	5	63	200	4.5	**4320 5.100**

ISO taper morse taper holders

Product information

- for holding Morse tapers with tang to DIN 228-1 form B
- ISO taper to DIN ISO 7388-1 form AD
- order pull studs, article no. 4925 or 4926, separately

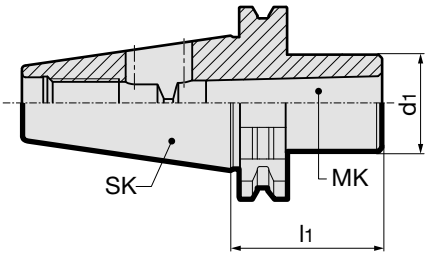

				Article no.	4238
ISO taper	MK	d_1 mm	l_1 mm		Order no.
40	1	25	50		**4238 1.040**
40	2	32	50		**4238 2.040**
40	3	40	70		**4238 3.040**
40	4	48	95		**4238 4.040**
50	1	25	45		**4238 1.050**
50	2	32	60		**4238 2.050**
50	3	40	65		**4238 3.050**
50	4	48	95		**4238 4.050**
50	5	63	105		**4238 5.050**

BT morse taper holders

Product information

- for holding Morse tapers with tang to DIN 228-1 form B
- MAS/BT to DIN ISO 7388-2 form JD
- order pull studs, article no. 4927 or 4928, separately

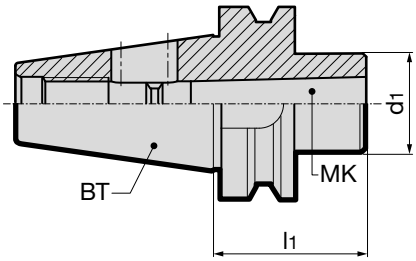

				Article no.	4239
BT	MK	d_1 mm	l_1 mm		Order no.
30	1	25	45		**4239 1.030**
30	2	32	60		**4239 2.030**
30	3	40	75		**4239 3.030**
40	1	25	50		**4239 1.040**
40	2	32	50		**4239 2.040**
40	3	40	70		**4239 3.040**
40	4	48	95		**4239 4.040**
50	1	25	45		**4239 1.050**
50	2	32	60		**4239 2.050**
50	3	40	65		**4239 3.050**
50	4	48	95		**4239 4.050**
50	5	63	105		**4239 5.050**

HSK-A blanks

Product information

- material: nitrided steel, hardened and ground taper (yellow in scale drawing), blank unhardened for further machining
- HSK-A to ISO 12164-1/DIN 69893-1

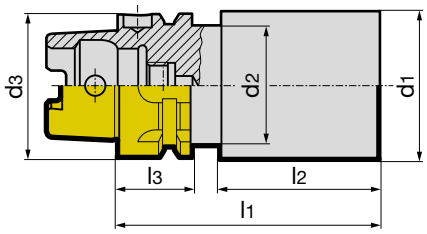

HSK-A d_3	d_1 mm	d_2 mm	l_1 mm	l_2 mm	l_3 mm	kg	Article no. 4983 Order no.
32	41	26	175	140	20	1.62	**4983 175.032**
40	51	34	205	170	20	3.02	**4983 205.040**
50	64	42	235	193	26	5.42	**4983 235.050**
63	63	53	150	108	26	3.55	**4983 150.063**
63	81	53	235	193	26	8.71	**4983 235.063**
80	101	67	235	193	26	13.63	**4983 235.080**
100	126	85	250	205	29	22.71	**4983 250.100**

HSK-C blanks

Product information

- material: nitrided steel, hardened and ground taper (yellow in scale drawing), blank unhardened for further machining
- machining not permitted in l3 area
- HSK-C to ISO 12164-1/DIN 69893-1

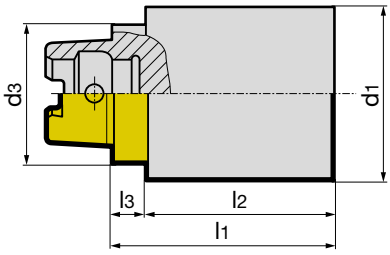

HSK-C d_3	d_1 mm	l_1 mm	l_2 mm	l_3 mm	kg	Article no. 4982 Order no.
25	30	100	90	10	0.54	**4982 87.025**
32	41	150	139	11	1.50	**4982 50.032**
40	51	180	169	11	2.81	**4982 63.040**
50	64	200	186	14	4.92	**4982 80.050**
50	64	90	76	14	2.15	**4982 100.050**
63	81	200	186	14	7.90	**4982 112.063**
63	81	100	86	14	3.89	**4982 125.063**
80	101	210	193	17	12.90	**4982 120.080**
100	124	225	208	17	21.70	**4982 145.100**

MODULE 6x6
PCD

HIGHEST PRECISION

Module 6x6 and PCD tools

- perfect concentricity
- axial and radial µ-accurate setting
- targeted balancing
- quick tool pre-setting

Please request our "Module 6x6" and "PCD" brochures.

HOLDERS FOR FINE MACHINING

Holders for
fine machining

PRECISION
IS A MATTER OF SETTING!

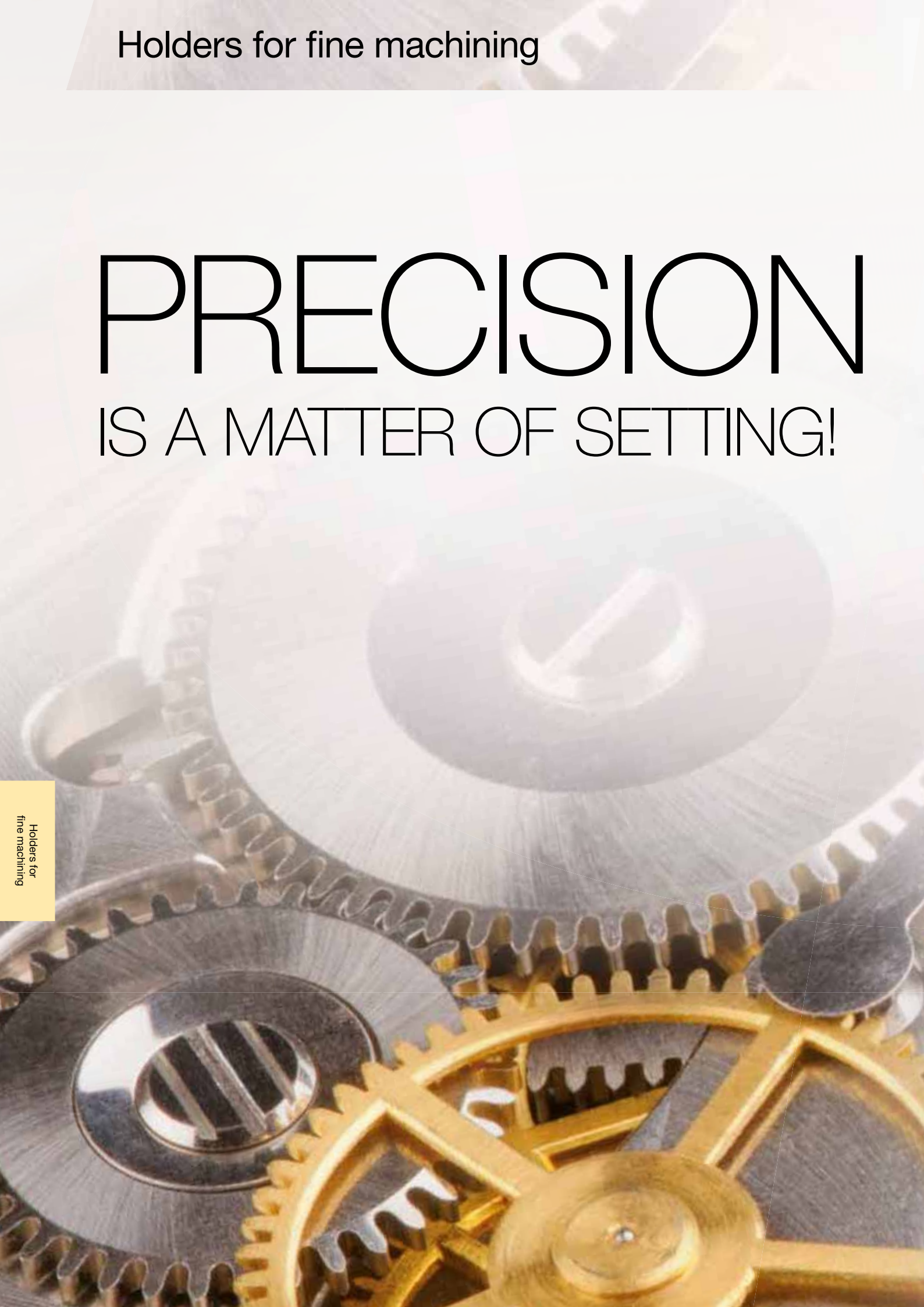

QUICK + SIMPLE ADJUSTMENT

AXIAL + RADIAL µ-ACCURATE SETTING

CONCENTRICITY AND ALIGNMENT ERROR COMPENSATION

MQL SUITABLE

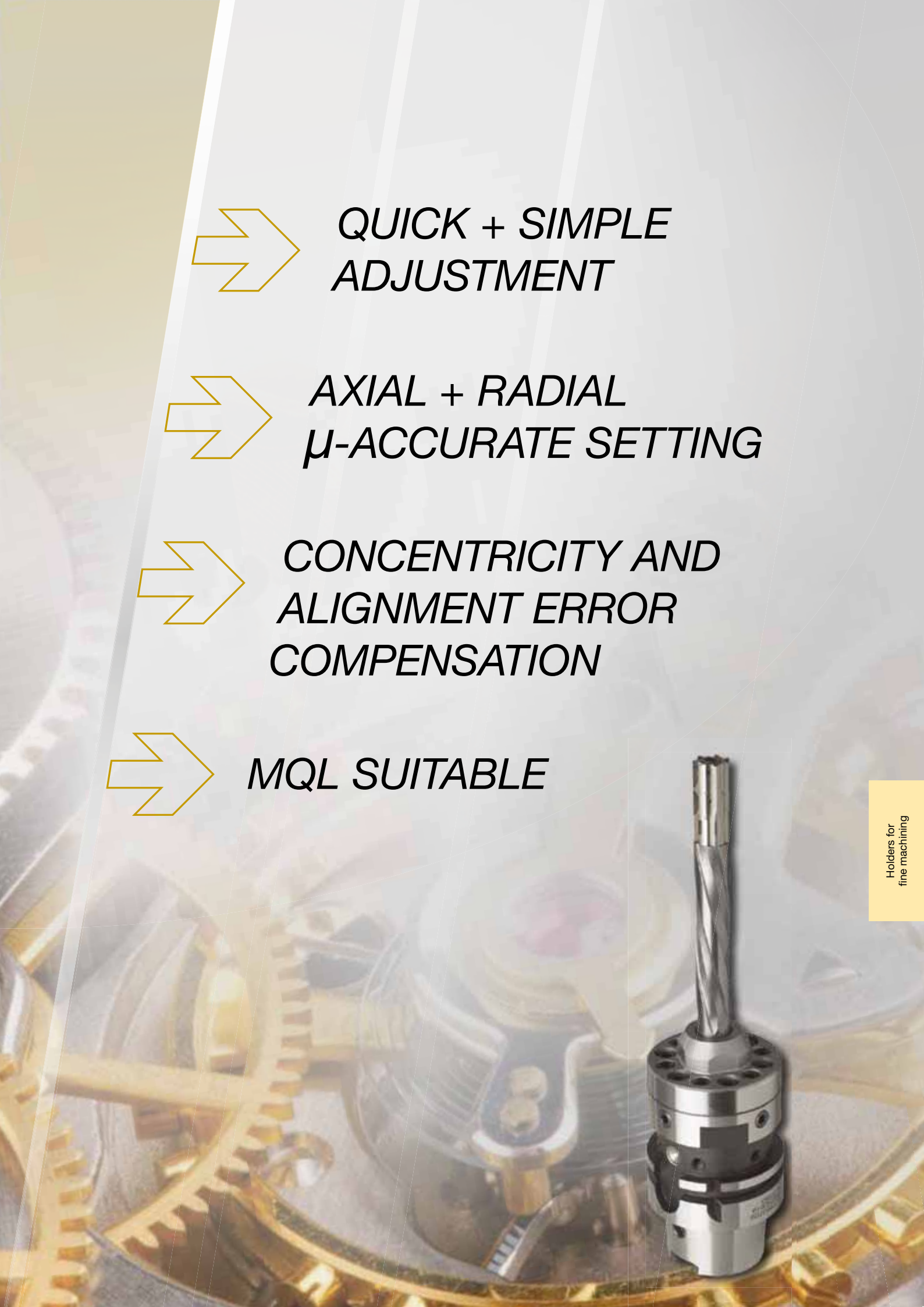

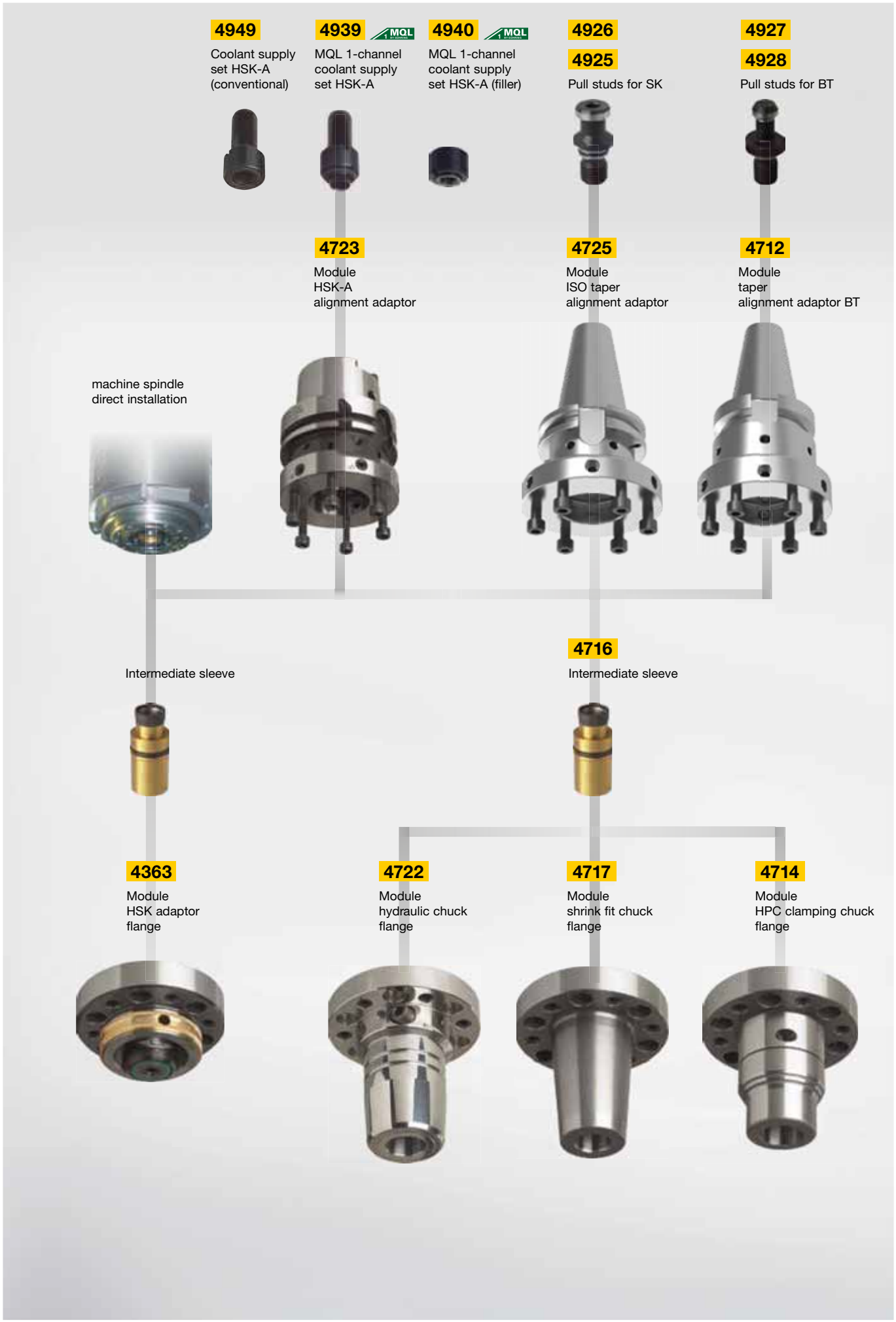
4949
Coolant supply set HSK-A (conventional)
4939
MQL 1-channel coolant supply set HSK-A
4940
MQL 1-channel coolant supply set HSK-A (filler)
4926
4925
Pull studs for SK
4927
4928
Pull studs for BT
4723
Module HSK-A alignment adaptor
4725
Module ISO taper alignment adaptor
4712
Module taper alignment adaptor BT
machine spindle direct installation
Intermediate sleeve
4716
Intermediate sleeve
4363
Module HSK adaptor flange
4722
Module hydraulic chuck flange
4717
Module shrink fit chuck flange
4714
Module HPC clamping chuck flange

Product information

- for the highly accurate alignment of all modular flanges 6x6
- cooling lubricant without loss and flow-disruption thanks to the use of an intermediate tube
- suitable for MQL and conventional cooling
- balancing quality G6.3 / 15,000 rev./min
- 6 balancing threads M6
- HSK-A to ISO 12164-1/DIN 69893-1

Scope of delivery

- incl. 6 screws for radial adjustment
- incl. 6 clamping screws

- order intermediate tube article no. 4716 separately
- order coolant supply set article no. 4949, MQL coolant supply set article no. 4939 or 4940 separately

- further dimensions on request

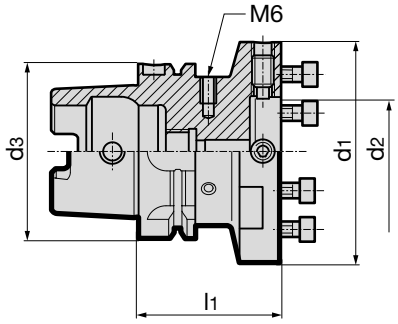

				Article no.	4723
HSK-A d_3 mm	d_1 mm	d_2 mm	l_1 mm		Order no.
63	60	30	60		4723 60.063
63	70	35	60		4723 70.063
63	80	40	60		4723 80.063
63	100	50	65		4723 100.063
63	117	60	65		4723 117.063
80	70	35	60		4723 70.080
80	80	40	60		4723 80.080
80	100	50	65		4723 100.080
80	117	60	65		4723 117.080
80	140	80	75		4723 140.080
100	70	35	55		4723 70.100
100	80	40	55		4723 80.100
100	100	50	65		4723 100.100
100	117	60	65		4723 117.100
100	140	80	75		4723 140.100

Module 6x6 ISO taper alignment adaptor

Product information
- ISO taper to DIN ISO 7388-1 form AD/AF
- for the highly accurate alignment of all modular flanges 6x6
- cooling lubricant without loss and flow-disruption thanks to the use of an intermediate tube
- suitable for MQL and conventional cooling
- balancing quality G6.3 / 15,000 rev./min
- 6 balancing threads M6

Scope of delivery
- incl. 6 screws for radial adjustment
- incl. 6 clamping screws
- order pull studs art. no. 4925 or 4926 separately

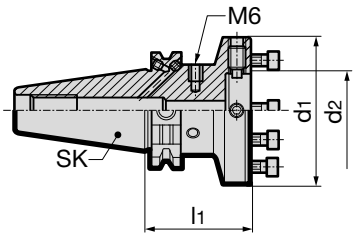

				Article no.	4725
SK	d_1 mm	d_2 mm	l_1 mm		Order no.
40	60	30	50		4725 60.040
40	70	35	50		4725 70.040
40	80	40	55		4725 80.040
40	100	50	60		4725 100.040
50	60	30	50		4725 60.050
50	70	35	50		4725 70.050
50	80	40	50		4725 80.050
50	100	50	60		4725 100.050
50	117	60	60		4725 117.050
50	140	80	60		4725 140.050

Module 6x6 taper alignment adaptor BT

Product information
- MAS/BT to DIN ISO 7388-2 form JD
- for the highly accurate alignment of all modular flanges 6x6
- cooling lubricant without loss and flow-disruption thanks to the use of an intermediate tube
- suitable for MQL and conventional cooling
- balancing quality G6.3 / 15,000 rev./min
- 6 balancing threads M6

Scope of delivery
- incl. 6 screws for radial adjustment
- incl. 6 clamping screws
- order pull studs art. no. 4927 or 4928 separately

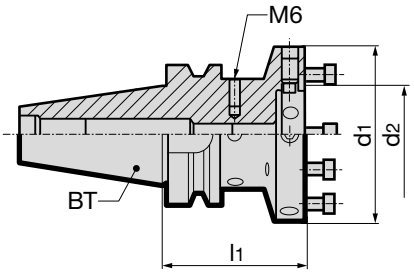

				Article no.	4712
BT	d_1 mm	d_2 mm	l_1 mm		Order no.
30	60	30	50		4712 60.030
30	70	35	50		4712 70.030
40	60	30	55		4712 60.040
40	70	35	55		4712 70.040
40	80	40	65		4712 80.040
40	100	50	70		4712 100.040
50	60	30	70		4712 60.050
50	70	35	70		4712 70.050
50	80	40	70		4712 80.050
50	100	50	70		4712 100.050
50	117	60	80		4712 117.050
50	140	80	80		4712 140.050

Product information

- for the highly accurate radial and axial alignment on alignment adaptors or machine spindles
- cooling lubricant without loss and flow-disruption thanks to the use of an intermediate tube
- balancing quality G6.3 / 15,000 rev./min
- for tool shank tolerance h6

Scope of delivery

- incl. adjustment screw article no. 4941 for conventional cooling
- incl. angular alignment set article no. 4715
- incl. 6 clamping screws
- incl. hexagon chuck key article no. 4912

- order intermediate tube article no. 4716 separately
- for other clamping Ø apply reduction bushes article no. 4368 or 4369

- MQL version on request

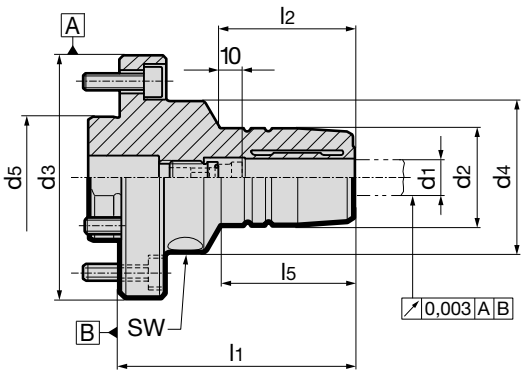

											Article no.	4722
Module-Ø d_3 mm	for shank Ø d_1 h6 mm	d_2 mm	d_4 mm	d_5 mm	l_1 mm	l_2 mm	l_5 mm	incl. setting screw art. no. 4941	intermediate sleeve tube art. no. 4716	SW		Order no.
70	12	32	40	35	75.0	45	45.0	12.100	14.020	4		**4722 12.070**
80	12	32	50	40	77.5	45	44.3	12.100	14.050	5		**4722 12.080**
80	20	42	50	40	82.5	50	51.5	20.100	14.040	5		**4722 20.080**
100	32	64	64	50	103.0	60	84.0	32.100	14.020	6		**4722 32.100**

Product information

- for the highly accurate radial and axial alignment on alignment adaptors or machine spindles
- cooling lubricant without loss and flow-disruption thanks to the use of an intermediate tube
- balancing quality G6.3 / 15,000 rev./min
- for tool shank tolerance h6
- with axial damping screw for optimal concentricity

Scope of delivery

- incl. adjustment screw with axial force
- damping article no. 4941
- incl. 6 angular alignment sets article no. 4715
- incl. 6 clamping screws
- order intermediate tube article no. 4716 separately
- further dimensions on request

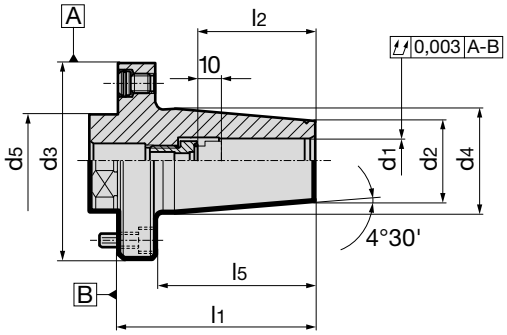

Modul-Ø d_3 mm	für Schaft-Ø d_1 h6 mm	d_2 mm	d_4 mm	d_5 mm	l_1 mm	l_2 mm	l_5 mm	incl. setting screw art. no. 4941	intermediate sleeve tube art. no. 4716	Article no. 4717 Order no.
60	6	21	27	30	70	36	56	6.100	14.010	**4717 6.060**
60	8	21	27	30	70	36	56	8.100	14.010	**4717 8.060**
60	10	24	32	30	70	40	56	10.100	14.020	**4717 10.060**
60	12	24	32	30	70	45	56	12.100	14.030	**4717 12.060**
70	12	24	32	35	75	45	60	12.100	14.020	**4717 12.070**
70	14	27	34	35	75	45	60	14.100	14.020	**4717 14.070**
70	16	27	34	35	75	48	60	16.100	14.040	**4717 16.070**
80	18	33	42	40	80	48	65	18.100	14.050	**4717 18.080**
80	20	33	42	40	80	50	65	20.100	14.040	**4717 20.080**
100	25	44	52	50	80	56	61	25.100	20.010	**4717 25.100**
100	32	44	52	50	80	60	61	32.100	20.020	**4717 32.100**

Module 6x6 HPC clamping chuck flange

Product information
- for the highly accurate radial and axial alignment on alignment adaptors or machine spindles
- cooling lubricant without loss and flow-disruption thanks to the use of an intermediate tube
- highest concentricity, clamping force and rigidity thanks to mech. tension gearing
- suitable for internal cooling up to 80 bar
- positive damping characteristics
- for tool shank tolerance h6

Scope of delivery
- incl. hexagon chuck key article no. 4912
- incl. 6 angular alignment sets article no. 4715
- incl. 6 clamping screws

- order intermediate tube article no. 4716 separately
- order clamping sleeves article nos. 4302, 4235, 4236, 4237 separately

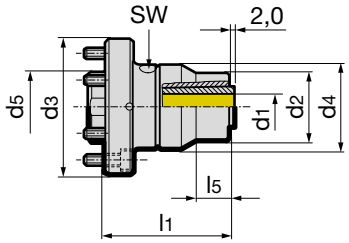

Article no.										4714
Module-Ø d_3 mm	nom. size	for shank Ø d_1 h6 mm	d_2 mm	d_4 mm	d_5 mm	l_1 mm	l_5 mm	intermediate sleeve tube article no. 4716	SW	**Order no.**
70	20	3 - 20	40	53	35	87	20	20.030	4	**4714 20.070**
80	20	3 - 20	40	53	40	73	20	20.030	4	**4714 20.080**
100	25	16-32	53	63	50	118	-	20.030	4	**4714 25.100**

Module 6x6 HSK adaptor flange

Product information
- for the highly accurate radial and axial alignment on alignment adaptors or machine spindles
- suitable for MQL and conventional cooling
- for the transferable torsional moment the interface between spindle and flange has to be taken into consideration
- for holding HSK-A/C shanks to ISO 12164-1/DIN 69893

Scope of delivery
- incl. MQL 4-point clamping set article no. 4930
- incl. clamping screw article no. 4935
- incl. brass lock ring article no. 4953
- incl. 6 angular alignment sets article no. 4715
- incl. 6 clamping screws
- incl. intermediate tube article no. 4716

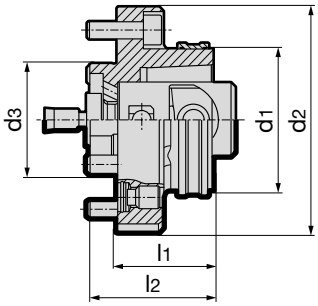

MQL BY GÜHRING

Article no.							4363
HSK-C d_1 mm	Module-Ø d_2 mm	d_3 mm	kg	l_1 mm	l_2 mm	intermediate sleeve tube article no. 4716	**Order no.**
32	60	30	0.4	26	36	24.060	**4363 24.060**
40	70	35	0.6	30	40	30.070	**4363 30.070**
50	80	40	1.0	35	45	238.080	**4363 38.080**
63	100	50	1.8	43	55	48.100	**4363 48.100**
80	117	60	2.9	50	62	60.117	**4363 60.117**
100	140	80	5.8	75	87	75,140	**4363 75.140**

4949
Coolant supply set HSK-A (conventional
4939
MQL 1-channel coolant supply set HSK-A
4940
MQL 1-channel coolant supply set HSK-A (filler)
4926
4925
Pull studs for SK
4927
4928
Pull studs for BT
4797
Module HSK-A alignment adaptor
4724
Module ISO taper alignment adaptor
4709
Module taper alignment adaptor BT
machine spindle direct installation
Intermediate sleeve
4716
Intermediate sleeve
4713
Module HSK adaptor flange
4360
Module hydraulic chuck flange
4760
Module shrink fit chuck flange

Product information

- for the highly accurate alignment of all modular flanges 4x4
- cooling lubricant without loss and flow-disruption thanks to the use of an intermediate tube
- suitable for MQL and conventional cooling
- balancing quality G6.3 / 15,000 rev./min
- 6 balancing threads M6
- HSK-A to ISO 12164-1/DIN 69893-1

Scope of delivery

- incl. 4 screws for radial adjustment
- incl. 4 clamping screws

- order coolant supply set article no. 4949, MQL coolant supply set article no. 4939 or 4940 separately
- order intermediate tube article no. 4716 separately

- further dimensions on request

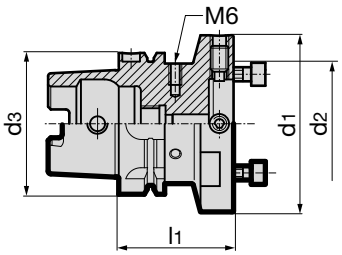

				Article no.	4297
HSK-A d_3 mm	d_1 mm	d_2 mm	l_1 mm		Order no.
63	60	30	60		**4297 60.063**
63	70	35	60		**4297 70.063**
63	80	40	60		**4297 80.063**
63	100	50	65		**4297 100.063**
63	117	60	65		**4297 117.063**
80	70	35	60		**4297 70.080**
80	80	40	60		**4297 80.080**
80	100	50	65		**4297 100.080**
80	117	60	65		**4297 117.080**
80	140	80	75		**4297 140.080**
100	70	35	55		**4297 70.100**
100	80	40	55		**4297 80.100**
100	100	50	65		**4297 100.100**
100	117	60	65		**4297 117.100**
100	140	80	75		**4297 140.100**

Module 4x4 ISO taper alignment adaptor

Product information
- ISO taper to DIN ISO 7388-1 form AD/AF
- for the highly accurate alignment of all modular flanges 4x4
- cooling lubricant without loss and flow-disruption thanks to the use of an intermediate tube
- suitable for MQL and conventional cooling
- balancing quality G6.3 / 15,000 rev./min
- 6 balancing threads M6

Scope of delivery
- incl. 4 screws for radial adjustment
- incl. 4 clamping screws

- order intermediate tube article no. 4716 separately
- order pull studs article no. 4925 or 4926 separately

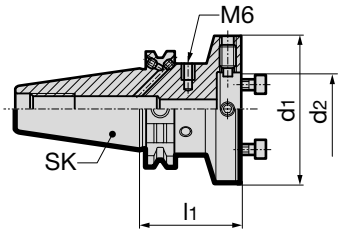

	Article no.	4724
SK	d_1 mm	d_2 mm	l_1 mm	Order no.
40	60	30	50	4724 60.040
40	70	35	50	4724 70.040
40	80	40	55	4724 80.040
40	100	50	60	4724 100.040
50	60	30	50	4724 60.050
50	70	35	50	4724 70.050
50	80	40	50	4724 80.050
50	100	50	60	4724 100.050
50	117	50	60	4724 117.050
50	140	80	60	4724 140.050

Module 4x4 taper alignment adaptor BT

Product information
- MAS/BT to DIN ISO 7388-2 form JD
- for the highly accurate alignment of all modular flanges 4x4
- cooling lubricant without loss and flow-disruption thanks to the use of an intermediate tube
- suitable for MQL and conventional cooling
- balancing quality G6.3 / 15,000 rev./min
- 6 balancing threads M6

Scope of delivery
- incl. 4 screws for radial adjustment
- incl. 4 clamping screws
- incl. threaded pins

- order pull studs article no. 4927 or 4928 separately

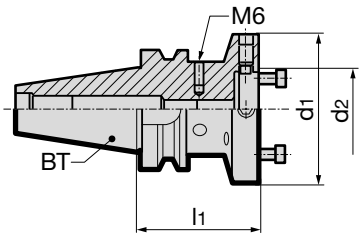

	Article no.	4709
BT	d_1 mm	d_2 mm	l_1 mm	Order no.
30	60	30	50	4709 60.030
30	70	35	50	4709 70.030
40	60	30	55	4709 60.040
40	70	35	55	4709 70.040
40	80	40	65	4709 80.040
40	100	50	70	4709 100.040
50	60	30	70	4709 60.050
50	70	35	70	4709 70.050
50	80	40	70	4709 80.050
50	100	50	70	4709 100.050
50	117	60	80	4709 117.050
50	140	80	80	4709 140.050

Module 4x4 hydraulic chuck flange

Product information

- for the highly accurate radial and axial alignment on alignment adaptors or machine spindles
- cooling lubricant without loss and flow-disruption thanks to the use of an intermediate tube
- balancing quality G6.3 / 15,000 rev./min
- for tool shank tolerance h6

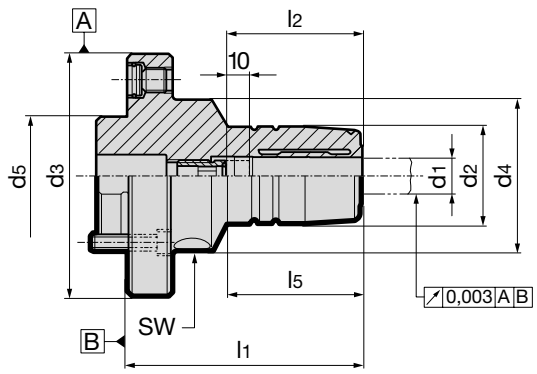

Scope of delivery

- incl. adjustment screw article no. 4941 for conventional cooling
- incl. angular alignment set article no. 4715
- incl. 4 clamping screws
- incl. hexagon chuck key article no. 4912

- order intermediate tube article no. 4716 separately
- for other clamping Ø apply reduction bushes article no. 4368 or 4369

- MQL version on request

											Article no.	**4360**
Module-Ø d_3 mm	for shank Ø d_1 h6 mm	d_2 mm	d_4 mm	d_5 mm	l_1 mm	l_2 mm	l_5 mm	incl. setting screw art. no. 4941	intermediate sleeve tube art. no. 4716	SW		**Order no.**
70	12	32	40	35	75.0	45	45.0	12.100	14.020	4		**4360 12.070**
80	12	32	50	40	77.5	45	44.3	12.100	14.050	5		**4360 12.080**
80	20	42	50	40	82.5	50	51.5	20.100	14.040	5		**4360 20.080**
100	32	64	64	50	103.0	60	84.0	32.100	14.020	6		**4360 32.100**

Module 4x4 shrink fit chuck flange

Product information

- for the highly accurate radial and axial alignment on alignment adaptors or machine spindles
- cooling lubricant without loss and flow-disruption thanks to the use of an intermediate tube
- balancing quality G6.3 / 15,000 rev./min
- for tool shank tolerance h6
- with axial damping screw for optimal concentricity

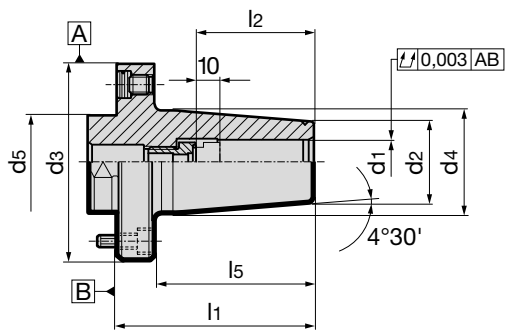

Scope of delivery

- incl. adjustment screw with axial force
- damping article no. 4941
- incl. angular alignment seten article no. 4715
- incl. 4 clamping screws

- order intermediate tube article no. 4716 separately

- further dimensions on request

										Article no.	**4760**
Module-Ø d_3 mm	for shank Ø d_1 h6 mm	d_2 mm	d_4 mm	d_5 mm	l_1 mm	l_2 mm	l_5 mm	incl. setting screw art. no. 4941	intermediate sleeve tube art. no. 4716		**Order no.**
60	6	21	27	30	70	36	56	6.100	14.010		**4760 6.060**
60	8	21	27	30	70	36	56	8.100	14.010		**4760 8.060**
60	10	24	32	30	70	40	56	10.100	14.020		**4760 10.060**
60	12	24	32	30	70	45	56	12.100	14.030		**4760 12.060**
70	12	24	32	35	75	45	60	12.100	14.020		**4760 12.070**
70	14	27	34	35	75	45	60	14.100	14.020		**4760 14.070**
70	16	27	34	35	75	48	60	16.100	14.040		**4760 16.070**
80	18	33	42	40	80	48	65	18.100	14.050		**4760 18.080**
80	20	33	42	40	80	50	65	20.100	14.040		**4760 20.080**
100	25	44	52	50	80	56	61	25.100	20.010		**4760 25.100**
100	32	44	52	50	80	60	61	32.100	20.020		**4760 32.100**

Module 4x4 HSK adaptor flange

Product information

- for the highly accurate radial and axial alignment on alignment adaptors or machine spindles
- suitable for MQL and conventional cooling
- for the transferable torsional moment the interface between spindle and flange has to be taken into consideration
- for holding HSK-A/C shanks to ISO 12164-1/DIN 69893

Scope of delivery

- incl. MQL 4-point clamping set article no. 4930
- incl. clamping screw article no. 4935
- incl. brass lock ring article no. 4953
- incl. 6 angular alignment sets article no. 4715
- incl. 6 clamping screws
- incl. intermediate tube article no. 4716

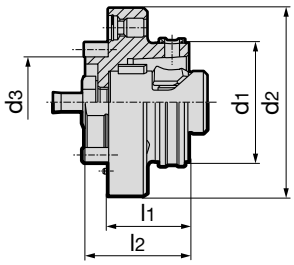

MQL BY GÜHRING

Article no. 4713

HSK-C d_1 mm	Module-Ø d_2 mm	d_3 mm	l_1 mm	l_2 mm	intermediate sleeve tube art. no. 4716	Order no.
32	60	30	26	36	24.060	**4713 24.060**
40	70	35	30	40	30.070	**4713 30.070**
50	80	40	35	45	238.080	**4713 38.080**
63	100	50	43	55	48.100	**4713 48.100**
80	117	60	50	62	60.117	**4713 60.117**
100	140	80	75	87	75.140	**4713 75.140**

Length adjustment screw for conventional cooling

Product information

- to adapt MQL tool holders to meet the requirements of conventional wet machining. For plain end shanks.The height of screw head compensates the height of MQL taper
- for MQL HSK-A shrink fit and hydraulic chucks
- for use with shank according to DIN 6535 with plain shank end for conventional cooling
- with the patented face orientated O ring axial force damping is provided which prevents concentricity errors.

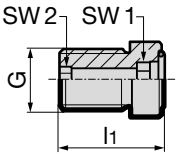

Article no. 4941

for HSK-A	clamping-Ø	G	d_1 mm	l_1 mm	SW1	SW2	Order no.
40	6	M5	6.0	14.9	2.5	-	**4941 6.041**
40	6	M7x1	5.8	15.0	2.5	-	**4941 6.040**
40	8	M7x1	5.8	18.0	3	-	**4941 8.040**
50	6	M8x1	5.8	14.0	2.5	-	**4941 6.050**
50	8	M8x1	6.8	18.0	3	-	**4941 8.050**
40 / 50	10	M8x1	9.8	17.7	4	-	**4941 10.050**
63/ 80/ 100	6	M10x1	5.8	17.0	2.5	-	**4941 6.100**
63/ 80/ 100	8	M10x1	7.8	17.0	3	-	**4941 8.100**
63/ 80/ 100	10	M10x1	9.8	16.2	4	-	**4941 10.100**
40/ 50/ 63/ 80/ 100	12	M10x1	9.8	16.0	5	-	**4941 12.100**
40/ 50/ 63/ 80/ 100	14	M10x1	9.8	17.2	5	-	**4941 14.100**
50/ 63/ 80/ 100	16	M12x1	15.8	18.2	6	-	**4941 16.100**
50/ 63/ 80/ 100	18	M12x1	15.8	19.2	6	-	**4941 18.100**
50/ 63/ 80/ 100	20	M16x1	15.8	19.2	6	8	**4941 20.100**
63/ 80/ 100	25	M16x1	15.8	22.7	6	8	**4941 25.100**
63/ 80/ 100	32	M16x1	15.8	26.7	6	8	**4941 32.100**

Intermediate sleeves for module flange and alignment adaptor 6x6 and 4x4

Product information
- for sealing when machining with either coolant or MQL
- Design without O-ring for HSK module adaptor flange art. no. 4363 and art. no. 4713

Scope of delivery
- with O-ring and sealing lip article no. 4617 1.140

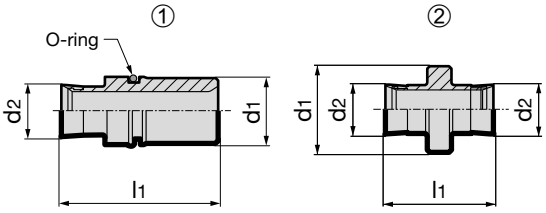

	Article no.	4716

d_1 mm	for d_2 mm	l_1 mm	O-ring	type	Order no.
14	10.5	47.5	10x1.5	1	**4716 14.010**
14	10.5	32.0	10x1.5	1	**4716 14.020**
14	10.5	37.5	10x1.5	1	**4716 14.030**
14	10.5	26.5	10x1.5	1	**4716 14.040**
14	10.5	31.5	10x1.5	1	**4716 14.050**
20	10.5	28.0	17x1.5	1	**4716 20.010**
20	10.5	25.5	17x1.5	1	**4716 20.020**
20	10.5	16.5	17x1.5	1	**4716 20.030**
4	10.5	26.1	–	1	**4716 24.060**
5	10.5	21.9	–	1	**4716 30.070**
6	10.5	21.9	–	1	**4716 238.080**
7	10.5	31.7	–	1	**4716 48.100**
10	10.5	28.6	–	1	**4716 60.117**
12	10.5	36.4	–	1	**4716 75.140**
17.8	10.5	22.3	–	2	**4716 60.100**
17.8	10.5	26.3	–	2	**4716 117.140**

Angle alignment units for module flange and alignment adaptor 6x6 and 4x4

Product information
- for accurate angle alignment of module flanges

Scope of delivery
- pressure disc, threaded pin and snap ring

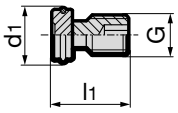

	Article no.	4715

for module	G	d_1 mm	l_1 mm	Order no.
60 / 70 / 80	M8x1	11.5	13	**4715 8.010**
100 / 117 / 140	M10x1	13.6	19	**4715 10.010**

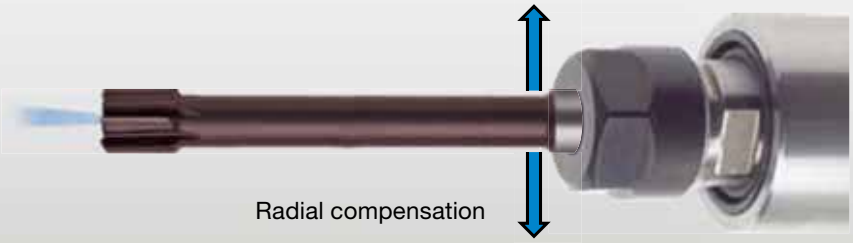

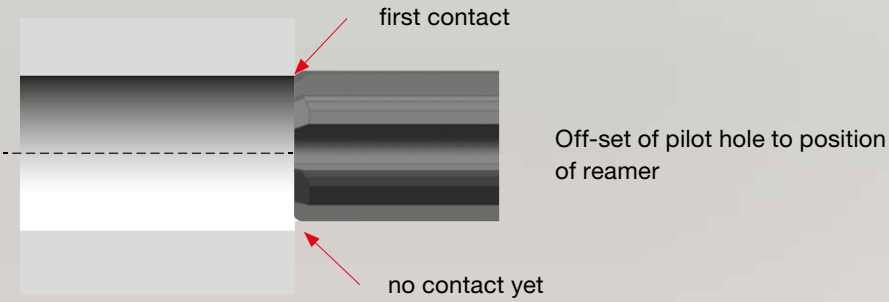

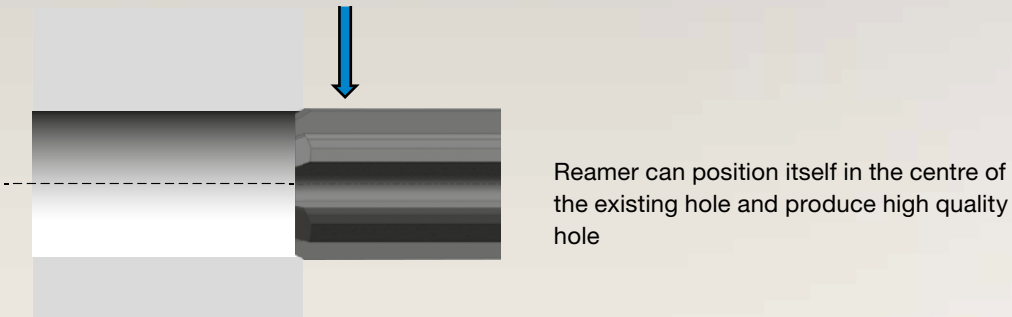

Floating holder for perfect HPC reaming

For the fine machining of holes the matching of pilot hole with the tool axis is a pre-requisite for the perfect functioning of the reamer. Floating holders serve to compensate the lateral off-set between tool and pilot hole. This off-set is usually created by machining with multiple clamping operations, cycle and positioning errors during tool and workpiece changes as well as by alignment errors on turning machines. As our floating holders have been designed for high-speed reaming operations, we consciously dispense of angle compensation. This improves the clamping rigidity. When the radial play is excessive upon entry into the pilot hole the reamer is subjected to high stresses. Crumbling of the edges is the consequence. Limited radial play on our floating holders compensates for any possible vibration even at high speeds.

Coolant ducts integrated in the floating holder ensure the reamer is optimally supplied with cooling lubricant. Longer hole tolerance compliancy and tool life are the result. Higher economic efficiency thanks to cost and time saving is guaranteed.

Floating holders with side lock holder

Product information
- straight shank d3 with whistle notch flat
- suitable for conventional and high performance multi-fluted reamers, because of no angle compensation
- central coolant supply max. 80 bar
- drive flat on tool shank necessary
- for tool shank tolerance h6

Scope of delivery
- for other shank Ø order reduction sleeves article no. 4095 separately
- order hexagon chuck key article no. 4912 separately

- further sizes with differing radial play are available on request
- compensates lateral deviation between tool and workpiece
- vibration-free compensation of concentricity and misalignment

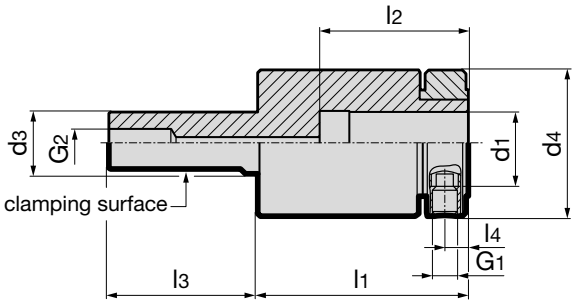

Article no.											4167
d_3 g6 mm	for holder d_1 h6 mm	recommen-ded tool-Ø	d_4 mm	l_1 mm	l_2 mm	l_3 mm	l_4 mm	G_1	G_2	radial play	Order no.
20	20	up to Ø 28	49	75	50	50	9.5	M8	1/8	0.12	**4167 20.020**
25	25	Ø 10 - Ø 36	59	85	60	60	9.5	M10	1/4	0.12	**4167 25.025**
32	32	Ø 16 - Ø 60	80	92	63	80	12.5	M12	3/8	0.12	**4167 32.032**

Short floating holders with side lock holder

Product information
- straight shank d3 with whistle notch flat
- suitable for conventional and high performance multi-fluted reamers, because of no angle compensation
- central coolant supply max. 80 bar
- drive flat on tool shank necessary
- for tool shank tolerance h6

Scope of delivery
- for other shank Ø order reduction sleeves article no. 4095 separately
- order hexagon chuck key article no. 4912 separately

- further sizes with differing radial play are available on request
- compensates lateral deviation between tool and workpiece
- vibration-free compensation of concentricity and misalignment

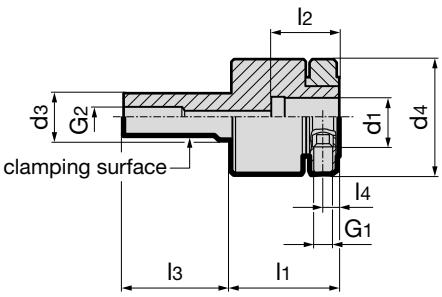

Article no.											4169
d_3 g6 mm	for holder d_1 h6 mm	recommen-ded tool-Ø	d_4 mm	l_1 mm	l_2 mm	l_3 mm	l_4 mm	G_1	G_2	radial play	Order no.
20	10	up to Ø 14	38.5	46	25	40	6	M6	1/8	0.08	**4169 10.020**
20	16	up to Ø 22	49	46	29	46	7	M6	1/8	0.10	**4169 16.020**
20	20	up to Ø 28	49	46	29	46	7	M6	1/8	0.12	**4169 20.020**

Mini floating holders with side lock holder

Product information
- holder shank with lateral clamping surface
- suitable for conventional and high performance multi-fluted reamers, because of no angle compensation
- very compact design for restricted space
- central coolant supply max. 80 bar
- drive flat on tool shank necessary
- for tool shank tolerance h6

Scope of delivery
- for other shank Ø order reduction sleeves article no. 4097 separately
- order hexagon chuck key article no. 4912 separately

- further sizes with differing radial play are available on request
- compensates lateral deviation between tool and workpiece
- vibration-free compensation of concentricity and misalignment

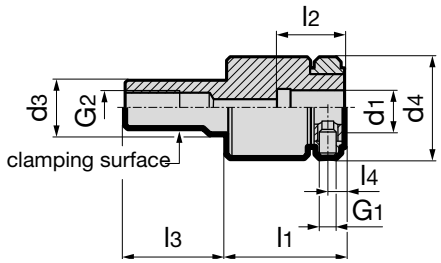

											Article no.	4174
d_3 g6 mm	for holder d_1 h6 mm	recommen-ded tool-Ø	d_4 mm	l_1 mm	l_2 mm	l_3 mm	l_4 mm	G_1	G_2	radial play		Order no.
16	10	bis Ø 14	30	35	20	30	5	M5	1/8	0.12		**4174 10.016**

Floating holder with ER collet holder

Product information
- straight shank d3 with whistle notch flat
- suitable for conventional and high performance multi-fluted reamers, because of no angle compensation
- for the application of internally cooled reamers use metallic sealed collets type DM article no. 4175
- central coolant supply max. 80 bar

Scope of delivery
- incl. retaining nut

- order collet article no. 4175 or 4307 as well as clamping key article no. 4913 separately

- further sizes with differing radial play are available on request
- compensates lateral deviation between tool and workpiece
- vibration-free compensation of concentricity and misalignment

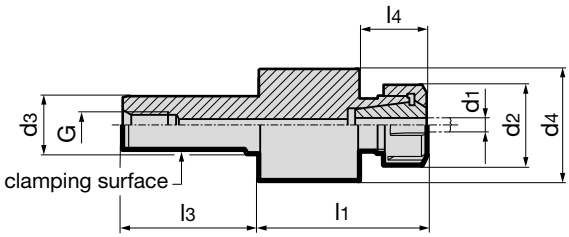

										Article no.	4098
d_3 g6 mm	recommended tool-Ø d1 mm	clamping range	d_2 mm	d_4 mm	l_1 mm	l_3 mm	l_4 mm	G	radial play		Order no.
16	up to Ø 16	ER20 Ø 1-13	34	49.5	74	40	29.5	1/8	0.06		**4098 20.016**
20	Ø 4- Ø 24	ER25 Ø 2-16	42	59	84	50	35	1/8	0.06		**4098 25.020**
25	up to Ø 16	ER20 Ø 1-13	34	49.5	74	60	29.5	1/4	0.08		**4098 20.025**
25	Ø 4- Ø 24	ER25 Ø 2-16	42	59	84	60	35	1/4	0.08		**4098 25.025**
32	Ø 6 - Ø 30	ER32 Ø 3-20	50	64	91	80	35.5	3/8	0.10		**4098 32.032**
40	Ø 6 - Ø 30	ER32 Ø 3-20	50	64	91	80	35.5	1/2	0.12		**4098 32.040**

Floating side lock holder VDI DIN 69880-1

Product information
- VDI holder shank with teeth
- suitable for conventional and high performance multi-fluted reamers, because of no angle compensation
- central coolant supply max. 80 bar
- tool shank with special whistle notch flat necessary
- drive flat on tool shank necessary
- for tool shank tolerance h6

Scope of delivery
- for other shank Ø order reduction sleeves article no. 4095 separately
- order hexagon chuck key article no. 4912 separately

- further dimensions available on request
- compensates lateral deviation between tool and workpiece
- vibration-free compensation of concentricity and misalignment

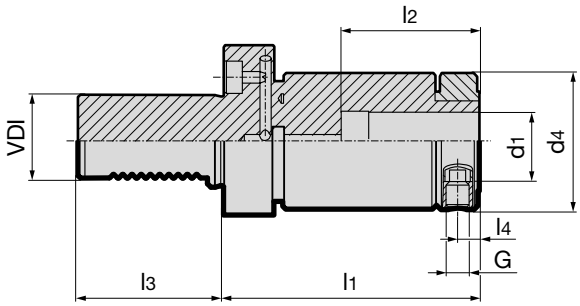

Article no. 4117

VDI	holder $d_{1\ h6}$ mm	clamping range	d_4 mm	l_1 mm	l_2 mm	l_3 mm	l_4 mm	M	radial play	Order no.
30	25	Ø 16-25	59	111	59	55	9.5	M10	0.12	**4117 25.030**
40	25	Ø 16-25	59	111	59	63	9.5	M10	0.12	**4117 25.040**
40	32	Ø 20-32	80	117	63	63	12.5	M12	0.12	**4117 32.040**
50	25	Ø 16-25	59	111	59	78	9.5	M10	0.12	**4117 25.050**
50	32	Ø 20-32	80	117	63	78	12.5	M12	0.12	**4117 32.050**

Floating ER Collet holder VDI DIN 69880-1

Product information
- VDI holder shank with teeth
- suitable for conventional and high performance multi-fluted reamers, because of no angle compensation
- for the application of internally cooled reamers use metallic sealed collets type DM article no. 4175
- with coolant supply max. 80 bar

Scope of delivery
- incl. retaining nut
- order collet article no. 4175 or 4307 as well as clamping key article no. 4913 separately
- further sizes with differing radial play are available on request
- compensates lateral deviation between tool and workpiece
- vibration-free compensation of concentricity and misalignment

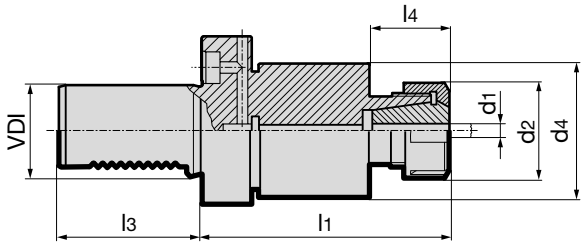

Article no. 4116

VDI	recommended tool-Ø	clamping range	d_2 mm	d_4 mm	l_1 mm	l_3 mm	l_4 mm	radial play	Order no.
30	up to Ø 20	ER25 Ø 2-16	42	59	109	55	35	0.08	**4116 25.030**
40	up to Ø 20	ER25 Ø 2-16	42	59	109	63	35	0.10	**4116 25.040**
40	Ø 6- Ø 32	ER32 Ø 3-20	50	64	116	63	35.5	0.10	**4116 32.040**
50	up to Ø 20	ER25 Ø 2-16	42	59	109	78	35	0.12	**4116 25.050**
50	Ø 6- Ø 32	ER32 Ø 3-20	50	64	116	78	35.5	0.12	**4116 32.050**

Reduction sleeves for floating holder

Product information

- for reducing the clamping diameter in floating holders
- central coolant supply
- drive flat on tool shank necessary
- applicable in floating holders article no. 4167 and 4117

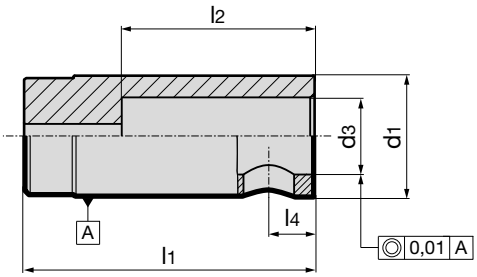

Article no.	4095

d_1 mm	for shank Ø d_3 h6 mm	l_1 mm	l_2 mm	l_4 mm	Order no.
20	14	50	40	9.5	**4095 14.020**
20	16	50	40	9.5	**4095 16.020**
25	16	60	40	9.5	**4095 16.025**
25	18	60	40	9.5	**4095 18.025**
25	20	60	50	9.5	**4095 20.025**
32	20	63	50	12.5	**4095 20.032**
32	25	63	60	12.5	**4095 25.032**

Reduction sleeves for short floating holder

Product information

- for reducing the clamping diameter in floating holders
- central coolant supply
- drive flat on tool shank necessary
- applicable in short floating holders article no. 4169

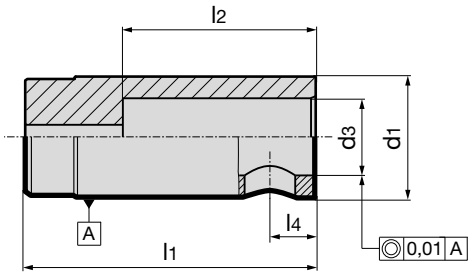

Article no.	4095

d_1 mm	for shank Ø d_3 h6 mm	l_1 mm	l_2 mm	l_4 mm	Order no.
10	4	25	10	6.0	**4095 4.010**
10	6	25	-	6.0	**4095 6.010**
10	8	25	20	6.0	**4095 8.010**
16	10	29	25	7.0	**4095 10.016**
16	12	29	25	7.0	**4095 12.016**
20	12	29	25	7.0	**4095 12.020**
20	14	29	25	7.0	**4095 14.020**
20	16	29	25	7.0	**4095 16.020**

Product information

- for reducing the clamping diameter in floating holders
- central coolant supply
- drive flat on tool shank necessary
- applicable in mini floating holders article no. 4174

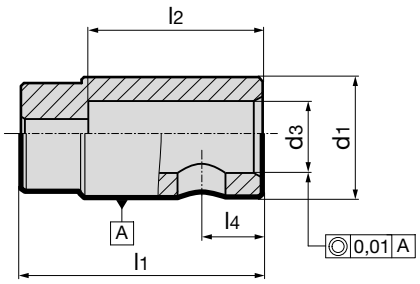

Article no.	4097

d_1 mm	d_3 mm	l_1 mm	l_2 mm	l_4 mm	Order no.
10	4	20	15	5	**4097 4.010**
10	6	20	15	5	**4097 6.010**
10	8	20	15	5	**4097 8.010**

Product information

- DIN ISO 15488
- for application without sealing washer
- concentricity error max. 6 µm
- for high-performance tools with internal cooling e.g. HR 500 reamers
- metallic sealed up to 300 bar coolant pressure
- ER-DM collets with restricted clamping range
- The tool must be clamped flush, or deeper into the collet chuck. A minimum clamping length of 2/3 as for standard collet chucks is not possible as there would be no other sealing.

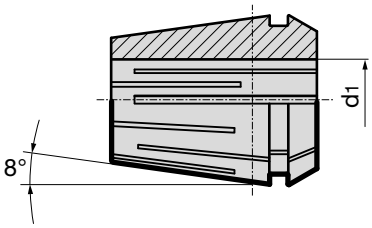

	Article no.	4175
nom. size	clamping range $d_{1\ h9}$	**Order no.**
ER20	3.00	**4175 3.020**
ER20	4.00	**4175 4.020**
ER20	5.00	**4175 5.020**
ER20	6.00	**4175 6.020**
ER20	7.00 - 6.50	**4175 7.020**
ER20	8.00 - 7.50	**4175 8.020**
ER20	9.00 - 8.50	**4175 9.020**
ER20	10.00 - 9.50	**4175 10.020**
ER20	11.00 - 10.50	**4175 11.020**
ER20	12.00 - 11.50	**4175 12.020**
ER20	13.00 - 12.50	**4175 13.020**
ER25	6.00	**4175 6.025**
ER25	8.00 - 7.50	**4175 8.025**
ER25	10.00 - 9.50	**4175 10.025**
ER25	12.00 - 11.50	**4175 12.025**
ER25	14.00 - 13.50	**4175 14.025**
ER25	16.00 - 15.50	**4175 16.025**
ER32	6.00	**4175 6.032**
ER32	8.00 - 7.50	**4175 8.032**
ER32	10.00 - 9.50	**4175 10.032**
ER32	12.00 - 11.50	**4175 12.032**
ER32	14.00 - 13.50	**4175 14.032**
ER32	16.00 - 15.50	**4175 16.032**
ER32	18.00 - 17.50	**4175 18.032**
ER32	20.00 - 19.50	**4175 20.032**

HSK

HSK CLAMPING TECHNOLOGY

HSK
clamping technology

ONE CLAMPING SET MANY NEW POSSIBILITIES!

SUITABLE FOR DIFFERENT SPINDLE CONTOURS

MAXIMUM CLAMPING FORCE

OPTIMAL COOLING SUPPLY – MQL & CONVENTIONAL

STRAIGHT-LINE COOLANT THROUGHFLOW

4-POINT CLAMPING TECHNOLOGY FOR MQL

TECHNICAL INFORMATION AND ADVANTAGES

GÜHROCLAMP

MQL BY GÜHRING

Our 4-point clamping system is suitable for radial manual clamping. Primarily designed for installation in spindles (short drilling spindles. multiple-spindle drilling heads).

Advantages:

- simple and hence more economic spindle manufacture
- short, small diameter spindles with constricted spindle bearing spacing
- suitable for a pressure up to 160 bar (for conventional internal cooling)
- fast response time thanks to uninterrupted MQL supply
- compatible installation contour and application of our 4-point clamping set for conventional cooling
- fixed installation through screwed joint, prebalanced, and good rotation symmetry, suitable for high-speed processes

Internal contour of spindle

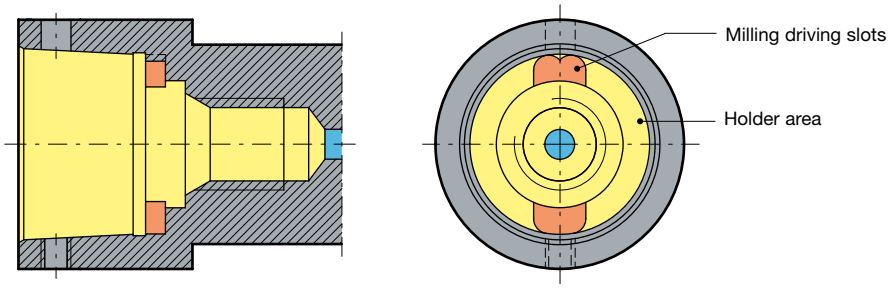

Installation and principle of operation

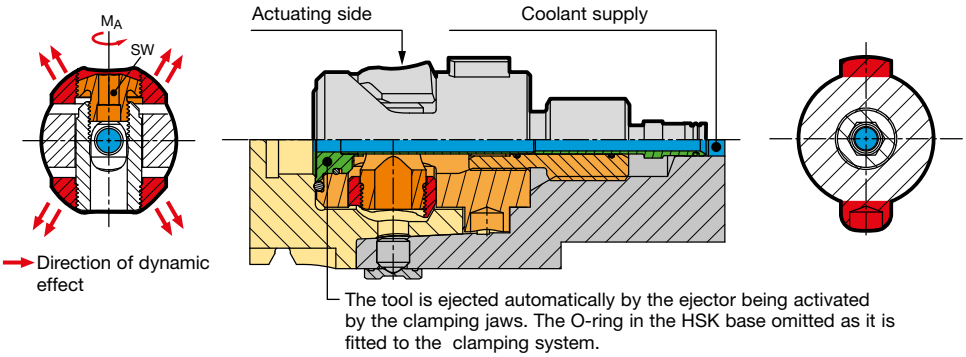

Bending. torsional and tightening moment for 4-point clamping sets for MQL

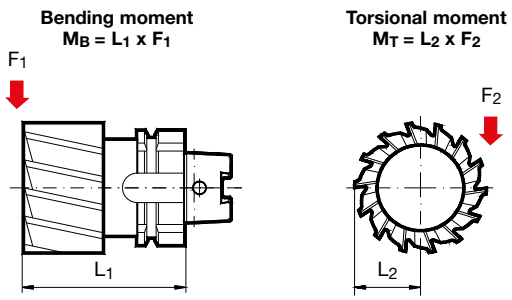

① We recommend M_A max. for rough machining and milling operations. For drilling and reaming operations a lower deviation of M_A max. up to 30% is permissible. Please check the torque with a torque wrench.
② Depending on temperature and lubricating conditions these values can be up to 15% lower.
③ Due to the screwed connection. M_T max. can be lower with adaptors.

HSK-C	**max.** torque M_A [Nm] ①	Key size	**max.** drawing force [kN] ②	**max.** linear bending moment M_B [Nm] ②	**max.** transferrable torsional moment M_T [Nm] ② ③
32	3.0	2.5	8.5	72	105
40	6.0	3.0	12.5	135	180
50	12.0	4.0	24.0	330	390
63	24.0	5.0	32.0	570	680
80	40.0	6.0	45.0	1000	1570
100	60.0	8.0	53.0	1620	4200

General notes: Our manual clamping sets must not be operated with motor-driven tools (impulse screwdriver or similar). The hexagonal key should not exceed the key size over its entire length, this largely prevents excessive torque being transferred. We recommend the T-handle hexagonal key, article no. 4912.
For accurate setting of the maximum torque and achieving the maximum interface rigidity, we recommend the application of a torque wrench, article no. 4915 with hexagonal sockets, article no. 4916. Production drawings of the spindle contour to suit direct installation are available on request, including .dxf.

MQL 4-point clamping set connection dimensions for new designs

Direct installation in
spindle with MQL adaptor

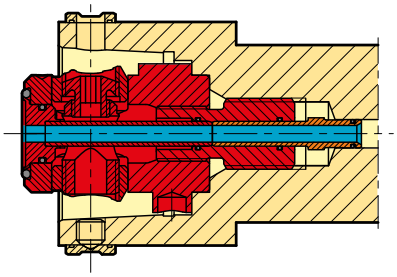

Short spindle adaptor
with MQL supply pipe

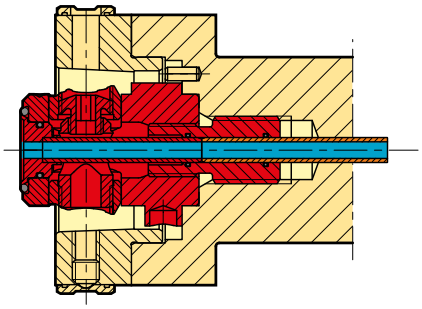

Adaptor (in front)
with MQL supply pipe

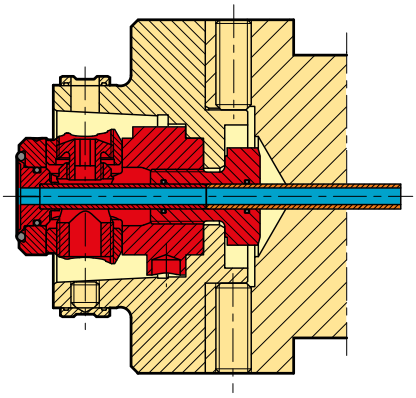

GÜHROCLAMP MQL 4-point clamping sets for MQL and IC

Product information
- for radial manual HSK tool clamping
- universal application for MQL and high-pressure IC
- the central and coaxial MQL supply with constant internal diameter prevents coolant from consolidating to DIN 69090-2
- for a coolant pressure up to 160 bar
- for clamping HSK-A/C shanks to ISO 12164-1/DIN 69893

Scope of delivery
- complete as shown in illustration
- installation and operating instructions

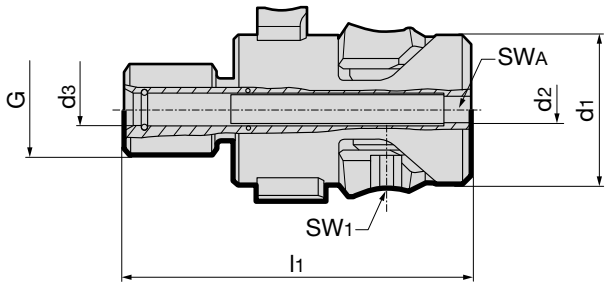

GÜHROCLAMP

	Article no.	4930

HSK-C	d_1 mm	d_2 mm	d_3 mm	l_1 mm	G	SW1	SW_A	kg	Order no.
32	16.7	3	4.1	41.75	M10	2.5	3	0.05	**4930 24.100**
40	20.6	4	5.1	43.90	M12	3	4	0.09	**4930 30.100**
50	25.5	5	7.1	54.20	M16	4	5	0.18	**4930 38.100**
50	25.5	5	6.1	54.20	M16	4	5	0.18	**4930 38.200**
63	33.0	6	7.1	72.20	M20	5	6	0.37	**4930 48.100**
80	41.0	8	10.1	90.20	M24	6	8	0.70	**4930 60.100**
100	52.0	10	12.1	107.10	M24	8	10	1.30	**4930 75.100**

GÜHROCLAMP component parts for MQL 4-point clamping sets article no. 4930

- retention screw only for adaptor
- if spindle cannot be locked. please use torque socket article no. 4963

GÜHROCLAMP

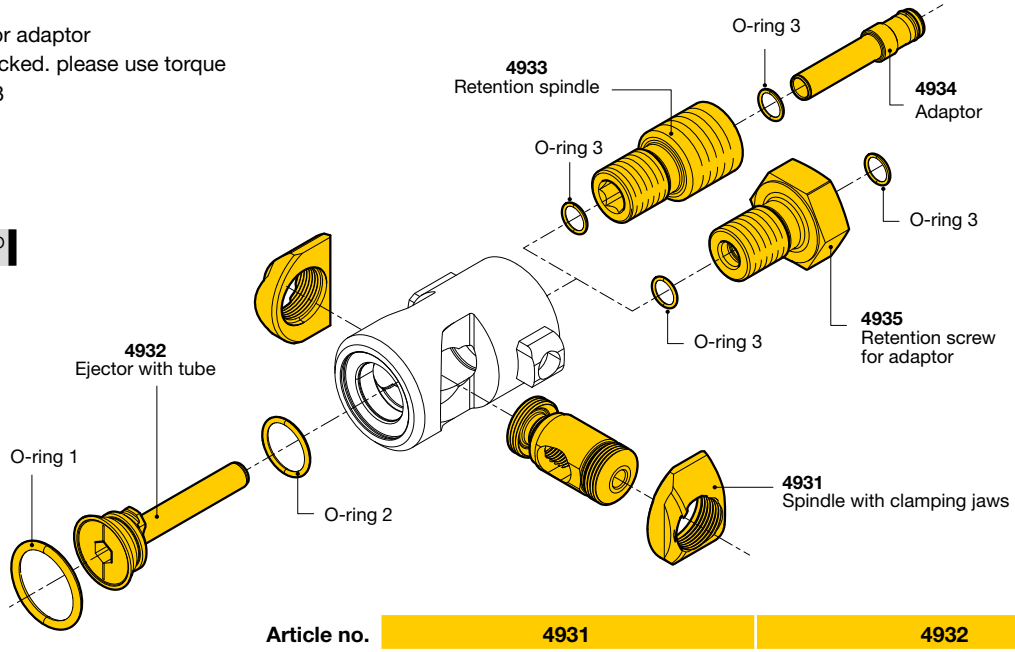

	Article no.	4931	4932
HSK-C	O-ring 1	O-ring 2	O-ring 3	Spindle with clamping jaws	Ejector with tube
	mm	mm	mm	**Order no.**	**Order no.**
32	10.5x2.0	6.0x1.5	3.5x1/4x1	**4931 24.000**	**4932 24.100**
40	13.0x2.0	7.0x1.5	4.5x1.0/5.0x1.0	**4931 30.000**	**4932 30.100**
50	16.0x2.0	10.0x1.5	5.5x1.0/7x1.0	**4931 38.000**	**4932 38.100**
63	20.3x2.4	14.0x1.5	7.0x1.0	**4931 48.000**	**4932 48.100**
80	23.4x3.53	16.0x2.0	10.0x1.5	**4931 60.000**	**4932 60.100**
100	28.17x3.53	22.0x2.0	12.0x1.70	**4931 75.000**	**4932 75.100**

Retention spindles for GÜHROCLAMP MQL 4-point clamping sets

Product information
- retention spindle for direct installation in spindle

Scope of delivery
- complete as shown in illustration

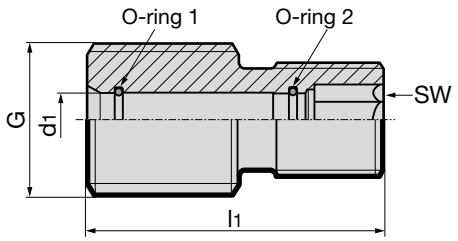

						Article no.	4933
for HSK-C	d_1 mm	l_1 mm	G	SW	O-ring 1	O-ring 2	**Order no.**
32	4.1	22.5	M10	4	3.5x1.0	4.0x1.0	**4933 24.100**
40	5.1	23.2	M 12	5	4.5x1.0	5.0x1.0	**4933 30.100**
50	7.1	27.0	M 16	6	5.5x1.0	7.0x1.0	**4933 38.100**
50	6.1	27.0	M 16	6	5.5x1.0	5.5x1.0	**4933 38.200**
63	7.1	39.0	M 20	8	7.0x1.0	7.0x1.0	**4933 48.100**
80	10.1	50.0	M 24	10	10.0x1.5	10.0x1.5	**4933 60.100**
100	12.1	60.0	M 24	12	12.0x1.70	12.0x1.70	**4933 75.100**

Adaptor for GÜHROCLAMP MQL 4-point clamping sets

Product information
- adaptor for direct installation in spindle and spindle adaptor (integrated) for coolant supply and sealing

Scope of delivery
- complete as shown in illustration

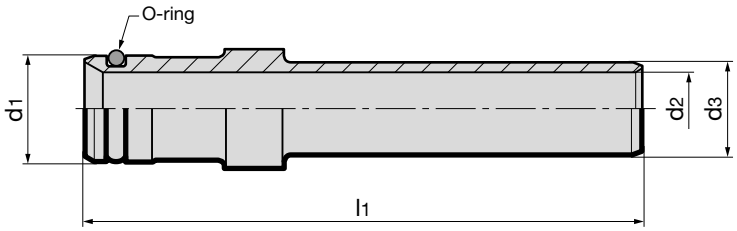

						Article no.	4934
for HSK-C	d_1 mm	d_2 mm	d_3 mm	l_1 mm	O-ring		**Order no.**
32	4.0	2.0	4.0	14	2.0 x 1.0		**4934 24.100**
40	5.0	3.0	5.0	28	3.0 x1.0		**4934 30.100**
50	6.0	4.0	6.0	28	4.0 x 1.0		**4934 38.200**
50	6.0	4.0	7.0	28	4.0 x 1.0		**4934 38.100**
63	8.0	5.5	7.0	42	6.0 x 1.0		**4934 48.100**
80	10.2	7.5	10.0	56	8.0 x 1.0		**4934 60.100**
100	12.0	9.5	12.0	60	10.0 x 1.0		**4934 75.100**

Retention screw for GÜHROCLAMP MQL 4-point clamping sets

Product information
- necessary for installation of MQL 4-point clamping set in spindle adaptors and module adaptor flange article no. 4363, 4386, 4387 and 4713
- change against standard retention bolt

Scope of delivery
- complete as shown in illustration

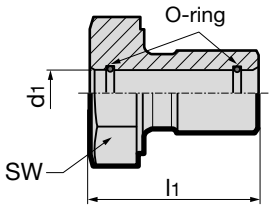

						Article no.	4935
for HSK-C	d_1 mm	l_1 mm	SW	O-ring 1	O-ring 2	torque Nm	**Order no.**
32	4.1	23.5	13	4x1.0	4x1.0	14	**4935 24.100**
40	5.1	21	16	4.5x1.0	5x1.0	30	**4935 30.100**
50	6.1	25	18	5.5x1.0	6x1.0	60	**4935 38.200**
50	7.1	25	18	5.5x1.0	7x1.0	60	**4935 38.100**
63	7.1	29	24	7x1.0	7x1.0	110	**4935 48.100**
80	10.1	36	24	10x1.5	10x1.5	180	**4935 60.100**
100	12.1	46.5	32	12x1.7	12x1.7	200	**4935 75.100**

M contour clamping sets for MQL and IC

Product information
- HSK clamping sets compatible with M contour spindles and adaptors
- universal application for MQL and high-pressure IC
- the central coaxial MQL supply with constant internal diameter ensures a uninterrupted coolant supply to DIN 69090-2
- for a coolant pressure up to 160 bar
- for radial manual HSK tool clamping
- for clamping HSK-A/C shanks to ISO 12164-1/DIN 69893

Scope of delivery
- incl. adaptor with through hole for uninterrupted coolant supply
- including installation and operating instructions
- order adaptor with spigot connection article no. 4616 separately
- spindle connection dimensions on request

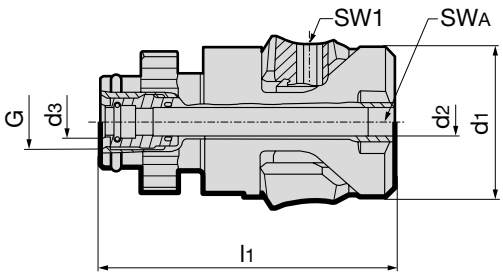

							Article no.	4615
HSK-C	d_1 mm	d_2 mm	d_3 mm	l_1 mm	G	SW1	SW_A	**Order no.**
32	16.7	3.0	4.1	43.4	M8x1	2.5	3	**4615 24.000**
40	20.6	4.0	5.1	48.3	M10x1	3	4	**4615 30.000**
50	25.5	5.0	6.1	55.3	M12x1	4	5	**4615 38.100**
50	25.5	5.0	7.1	55.3	M12x1	4	5	**4615 38.000**
63	33.0	6.0	7.1	64.7	M12x1	5	6	**4615 48.000**
80	41.0	8.0	10.1	75.3	M16x1	6	8	**4615 60.000**
100	52.0	10.0	12.1	94.5	M18x1	8	10	**4615 75.000**

Adaptor with spigot transition for M contour clamping set

Product information

- application on M contour clamping sets article no. 4615 instead of adaptor with coolant transfer hole
- universal application for MQL and high-pressure IC
- for a coolant pressure up to 160 bar
- adaptor for spindles without coolant tube for uninterrupted coolant supply

- spindle connection dimensions on request

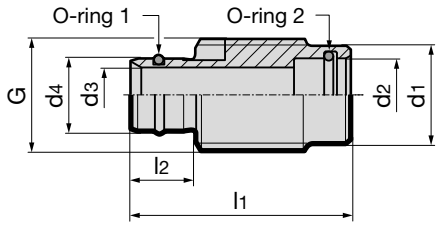

										Article no.	4616
for HSK-C	d_1 mm	d_2 mm	d_3 mm	d_4 mm	l_1 mm	l_2 mm	O-ring 1	O-ring 2	G		Order no.
32	-	3.5	3	5.00	14.4	5.4	3.5x1	3x1	M8x1		**4616 24.000**
40	7.7	4.5	4	6.00	22.0	6.5	4.0x1	4x1	M10x1		**4616 30.000**
50	8.5	5.5	5	8.00	23.0	7.5	5.5x1	6x1	M12x1		**4616 38.000**
63	10.6	7.0	6	8.00	24.0	7.0	7.0x1	6x1	M12x1		**4616 48.000**
80	-	10.0	8	11.30	23.3	8.3	10x1.5	8x1.5	M12x1		**4616 60.000**
100	-	12.0	10	13.80	30.6	9.6	12x1.5	12x1.5	M18x1		**4616 75.000**

Tool for the assembly / disassembly of M contour clamping sets

Product information

- for the assembly and disassembly of M contour clamping sets article no. 4615

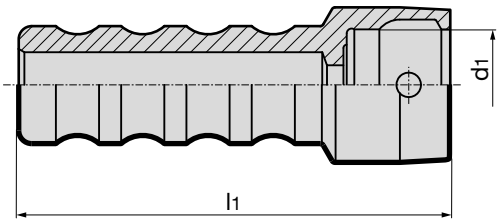

			Article no.	4624
for HSK	d_1 mm	l_1 mm		Order no.
32	17	118.7		**4624 32.000**
40	21	121.6		**4624 40.000**
50	26	127.5		**4624 50.000**
63	34	132		**4624 63.000**
80	42	143		**4624 80.000**
100	53	152		**4624 100.000**

Product information

- for assembly and disassembly of ejectors of MQL clamping sets, article no. 4930, and M contour clamping sets, article no. 4615

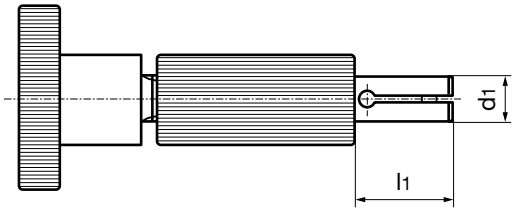

			Article no.	4986
for HSK	d_1 mm	l_1 mm		Order no.
32	3	9		**4986 3.032**
40	4	9		**4986 4.040**
50	5	11		**4986 5.050**
63	6	12		**4986 6.063**
80	8	15		**4986 8.080**
100	10	15		**4986 10.100**

Assembly instructions

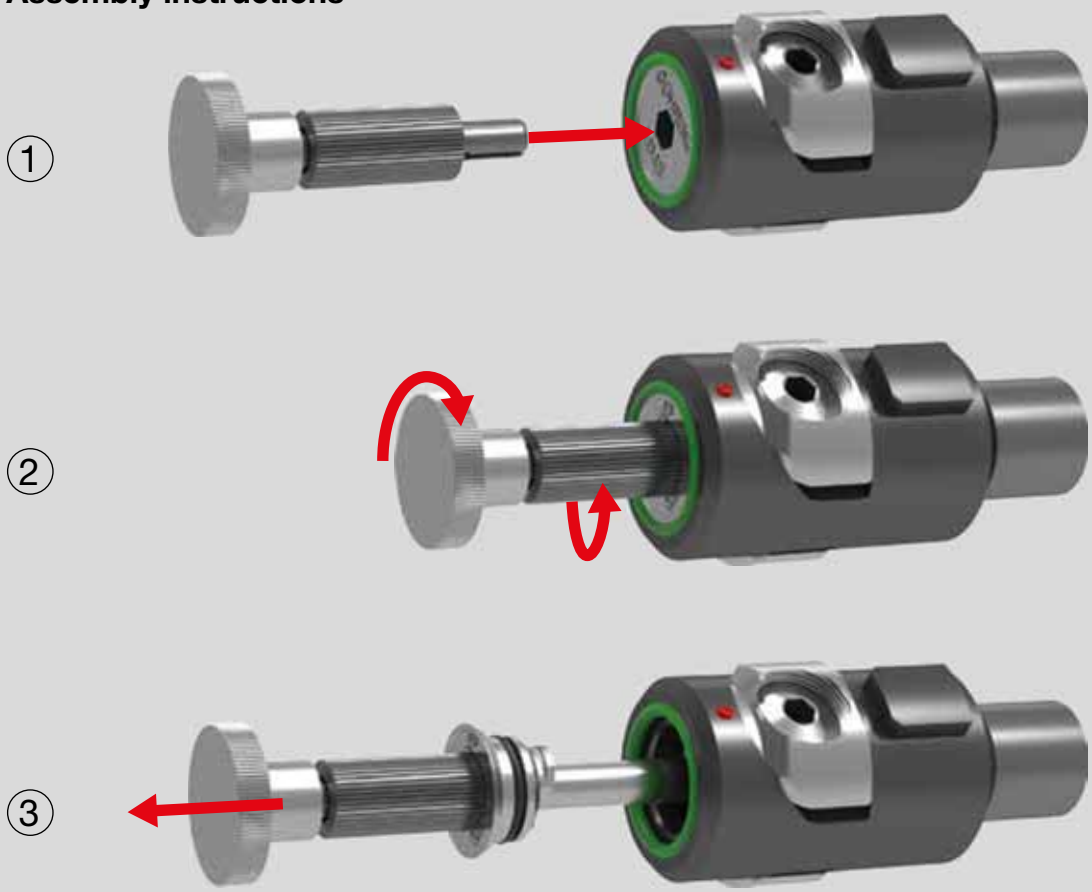

THE 4-POINT CLAMPING TECHNOLOGY FOR CONVENTIONAL COOLING

TECHNICAL INFORMATION AND ADVANTAGES

Conventional 4-point clamping sets offer enormous clamping force and optimal cooling lubricant supply. They are suitable for radial manual HSK tool clamping.

Advantages:

- simple and hence more economic spindle manufacture
- short, small diameter spindles with constricted spindle bearing spacing
- suitable for a pressure up to 80 bar

General notes: Our manual clamping sets must not be operated with motor-driven tools (impulse screwdriver or similar). The hexagonal key should not exceed the key size over its entire length. this largely prevents excessive torque being transferred. We recommend the T-handle hexagonal key, article no. 4912. For accurate setting of the maximum torque and achieving the maximum interface rigidity. we recommend the application of a torque wrench, article no. 4915 with hexagonal sockets, article no. 4916. Removal of the locking ring is made by releasing the pressure ball screw. This is achieved with the use of an Allen key inserted through the opposite access hole and through the hollow threaded spindle and turned anticlockwise. Once released. the locking ring will slide axially off. Production drawings of the spindle contour to suit direct installation are available on request, including .dxf.

Application examples

Spindle interface

Direct installation in spindle

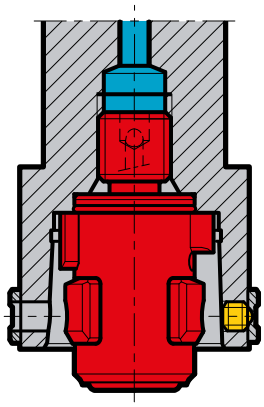

Spindle adaptor (integrated)

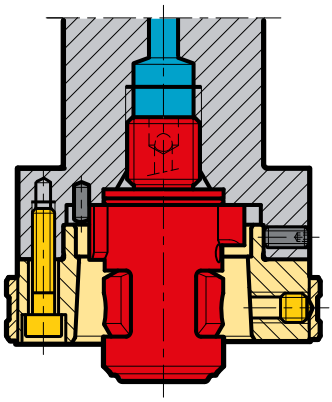

Spindle adaptor (in front)

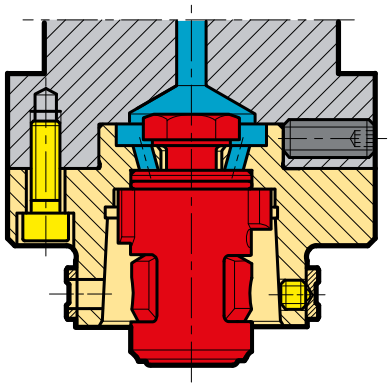

Adaptor

Basic adaptor for ISO taper spindles

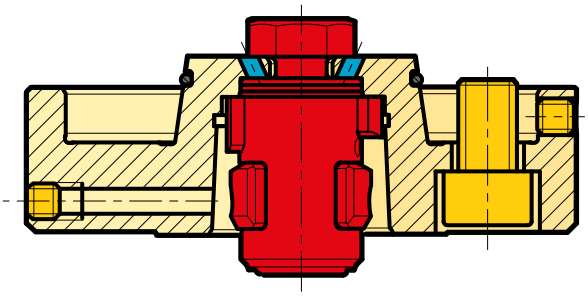

HSK-C extension

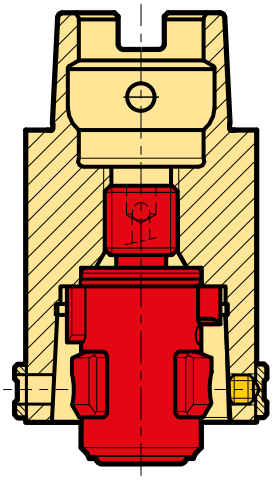

HSK-A reduction

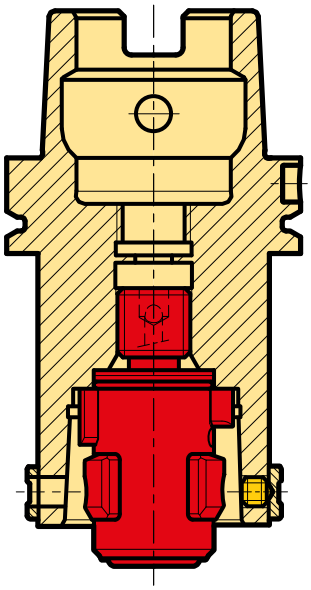

Internal contour of spindle

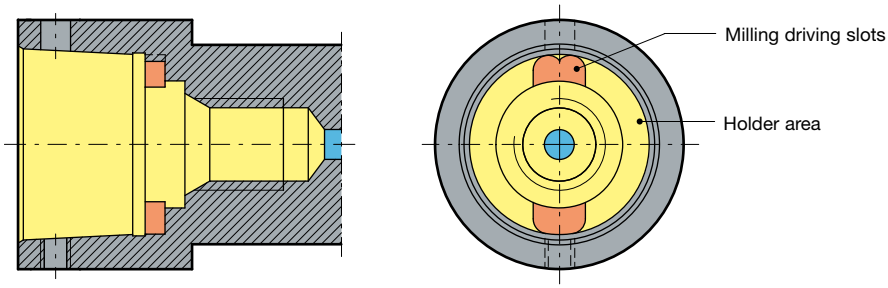

Installation and principle of operation

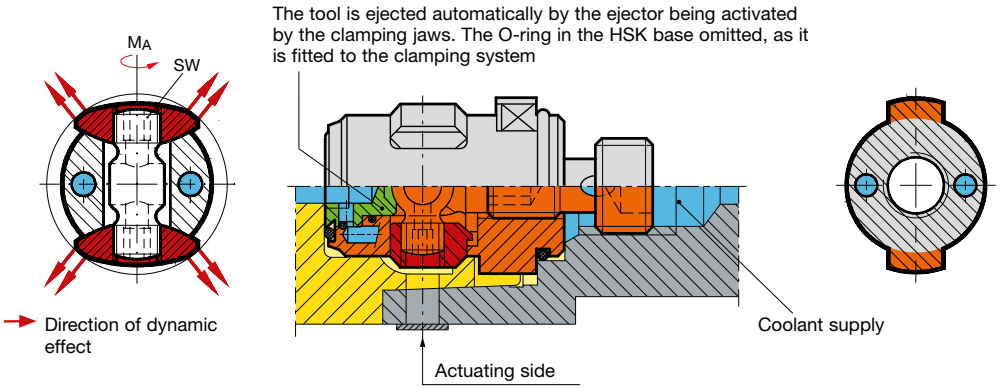

Bending torsional and tightening moment for 4-point clamping sets for conventional cooling

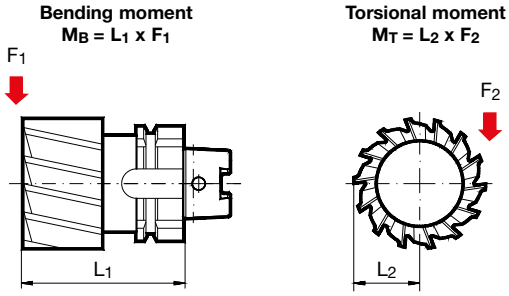

① We recommend M_A max. for rough machining and milling operations. For drilling and reaming operations a lower deviation of M_A max. up to 30% is permissible. Please check the torque with a torque wrench.
② Depending on temperature and lubricating conditions these values can be up to 15% lower.
③ Due to the screwed connection. M_T max. can be lower with adaptors.

HSK-C	**max.** torque M_A [Nm] ①	Key size	**max.** drawing force [kN] ②	**max.** linear bending moment M_B [Nm] ②	**max.** transferrable torsional moment M_T [Nm] ② ③
25	1.5	2.5	4.5	30	30
32	3.0	2.5	7.0	60	100
40	6.0	3.0	12.0	130	170
50	14.0	4.0	20.0	280	350
63	27.0	5.0	28.0	500	640
80	54.0	6.0	40.0	900	1330

4-point clamping sets for conventional cooling

Product information
- for a coolant pressure up to 80 bar
- for radial manual HSK tool clamping
- for clamping HSK-A/C shanks to ISO 12164-1/DIN 69893

Scope of delivery
- including installation and operating instructions

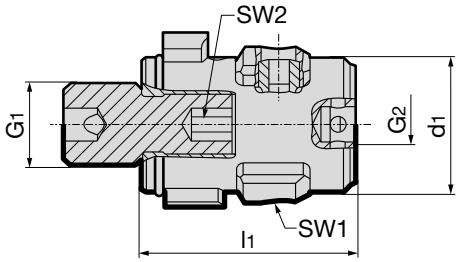

							Article no.	4958
HSK-A/C	d_1 mm	l_1 mm	G1	G2	SW1	SW2	kg	Order no.
25	13.8	30.30	M 8	M 4	2.5	3	0.025	**4958 19.000**
32	16.7	35.75	M10	M 5	2.5	4	0.050	**4958 24.000**
40	20.6	43.70	M12	M 6	3.0	5	0.080	**4958 30.000**
50	25.5	53.70	M16	M 8	4.0	6	0.150	**4958 38.000**
63	33.0	71.20	M20	M10	5.0	8	0.310	**4958 48.000**
80	41.0	90.10	M24	M12	6.0	10	0.640	**4958 60.000**

Component parts for 4-point clamping set article no. 4958. separate or set

- retention screw only for adaptor
- if spindle cannot be locked please use torque socket article no. 4963

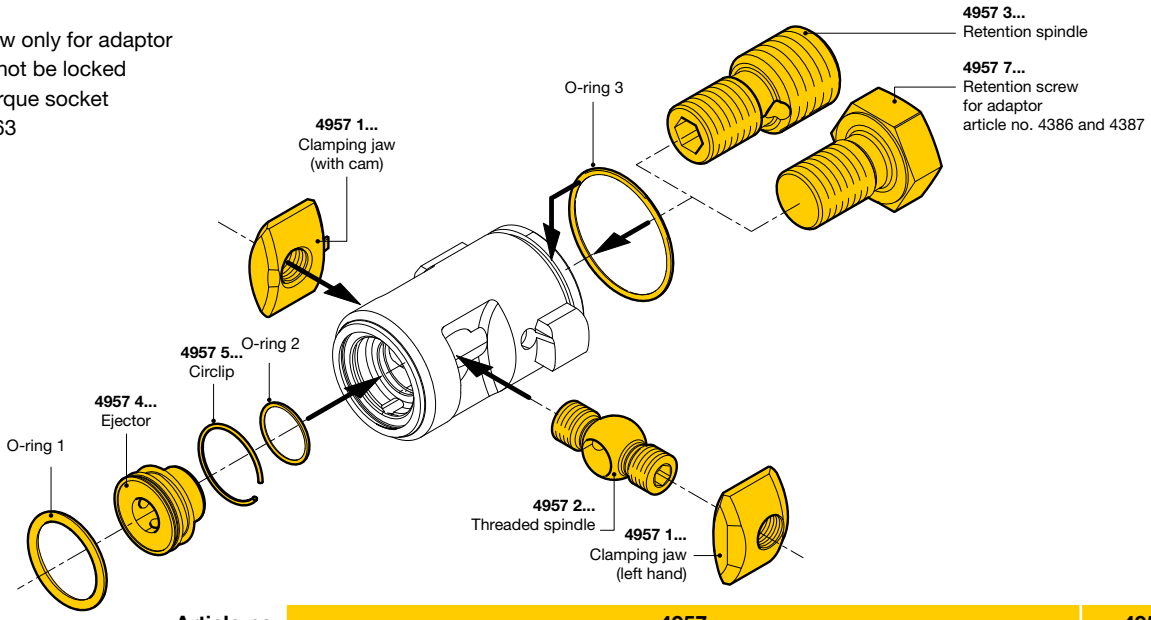

			Article no.	4957						4959
HSK-C	O-ring 1	O-ring 2	O-ring 3	Clamping jaw set	Threaded spindle	Retention spindle	Ejector	Circlip	Retention screw	Set
	mm	mm	mm	Order no.	Order no.	Order no.	Order no.	Order no.	Order no.	Order no.
25	9.0 x 1.2	6.0 x 0.75	11.0 x 1.0	**4957 1.019**	**4957 2.019**	**4957 3.019**	**4957 4.019**	**4957 5.019**	**4957 7.019**	**4959 19.000**
32	11.0 x 1.5	7.0 x 1.0	14.0 x 1.0	**4957 1.024**	**4957 2.024**	**4957 3.024**	**4957 4.024**	**4957 5.024**	**4957 7.024**	**4959 24.000**
40	13.0 x 1.5	9.0 x 1.0	17.0 x 1.0	**4957 1.030**	**4957 2.030**	**4957 3.030**	**4957 4.030**	**4957 5.030**	**4957 7.030**	**4959 30.000**
50	16.0 x 2.0	11.0 x 1.0	22.0 x 1.5	**4957 1.038**	**4957 2.038**	**4957 3.038**	**4957 4.038**	**4957 5.038**	**4957 7.038**	**4959 38.000**
63	20.3 x 2.4	14.0 x 1.0	28.0 x 1.5	**4957 1.048**	**4957 2.048**	**4957 3.048**	**4957 4.048**	**4957 5.048**	**4957 7.048**	**4959 48.000**
80	24.0 x 3.0	17.0 x 1.0	35.0 x 1.5	**4957 1.060**	**4957 2.060**	**4957 3.060**	**4957 4.060**	**4957 5.060**	**4957 7.060**	**4959 60.000**

HSK spindle adaptors (in front)

Product information
- for the transferable torsional moment the interface between spindle and flange has to be taken into consideration
- radially alignable
- for clamping HSK-A/C shanks to ISO 12164-1/DIN 69893

Scope of delivery
- incl. clamping set article no. 4958 for conventional cooling
- incl. brass lock ring article no. 4953
- incl. indexing pin and retention screws

- for MQL application order article no. 4713

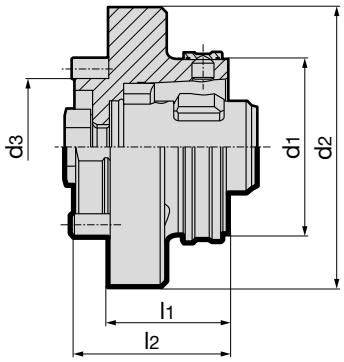

							Article no.	4386
HSK-C d_1	d_2 mm	d_3 mm	l_1 mm	l_2 mm	SW	kg		Order no.
25	45	23	20	28	2.5	0.22		**4386 19.000**
32	60	30	26	36	2.5	0.38		**4386 24.000**
40	70	35	30	40	3.0	0.60		**4386 30.000**
50	80	40	35	45	4.0	0.92		**4386 38.000**
63	100	50	43	55	5.0	1.75		**4386 48.000**
80	117	60	50	62	6.0	2.79		**4386 60.000**

Modul 4x4 HSK adaptor flange

Product information
- for the highly accurate radial and axial alignment on alignment adaptors or machine spindles
- suitable for MQL and conventional cooling
- for the transferable torsional moment the interface between spindle and flange has to be taken into consideration
- for holding HSK-A/C shanks to ISO 12164-1/DIN 69893

Scope of delivery
- incl. MQL 4-point clamping set article no. 4930
- incl. clamping screw article no. 4935
- incl. brass lock ring article no. 4953
- incl. 6 angular alignment sets article no. 4715
- incl. 6 clamping screws
- incl. intermediate tube article no. 4716

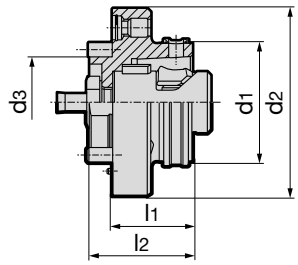

MQL BY GÜHRING

						Article no.	4713
HSK-C d_1 mm	Module-Ø d_2 mm	d_3 mm	l_1 mm	l_2 mm	intermediate sleeve tube art. no. 4716		Order no.
32	60	30	26	36	24.060		**4713 24.060**
40	70	35	30	40	30.070		**4713 30.070**
50	80	40	35	45	238.080		**4713 38.080**
63	100	50	43	55	48.100		**4713 48.100**
80	117	60	50	62	60.117		**4713 60.117**
100	140	80	75	87	75.140		**4713 75.140**

Product information

- for the transferable torsional moment the interface between spindle and flange has to be taken into consideration
- radially alignable
- for clamping HSK-A/C shanks to ISO 12164-1/DIN 69893

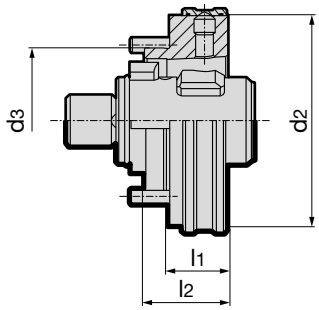

Scope of delivery

- incl. clamping set article no. 4958 for conventional cooling (nom. Size 100 article no. 4930)
- incl. brass lock ring article no. 4953
- incl. indexing pin and retention screws

- for MQL design order code no. xxx.100

							Article no.	4385
for HSK-C	d_2 mm	d_3 mm	l_1 mm	l_2 mm	SW	kg		Order no.
32	40	27.0	12.5	16	2.5	0.14		**4385 24.000**
40	50	33.5	15.0	20	3.0	0.26		**4385 30.000**
50	63	42.0	17.5	25	4.0	0.48		**4385 38.000**
63	80	55.0	22.5	32	5.0	0.99		**4385 48.000**
80	100	68.0	27.5	40	6.0	1.88		**4385 60.000**
100	125	88.0	30.0	50.5	8.0	3.50		**4385 75.000**

ISO taper/HSK-C basic adaptor for spindles to DIN 2079

Product information
- for the conversion of SK to HSK-A/C interfaces to ISO 12163-1/DIN 69893-1

Scope of delivery
- incl. clamping set article no. 4958 for conventional cooling
- incl. retention screws

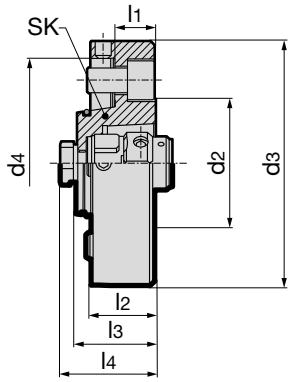

											Article no.	4387
for ISO taper	HSK-C	d_2 mm	d_3 mm	d_4 mm	l_1 mm	l_2 mm	l_3 mm	l_4 mm	SW	kg		Order no.
30	40	50	85	69.83	25	35	37.0	39.0	3	1.08		**4387 30.030**
40	50	63	100	88.88	20	30	39.5	46.5	4	1.40		**4387 40.038**
50	63	80	150	128.57	25	40	48.5	58.5	5	1.96		**4387 50.048**
50	80	100	150	128.57	40	55	61.1	71.1	6	2.20		**4387 50.060**

HSK-A/HSK-C reductions

Scope of delivery
- incl. clamping set article no. 4958 for conventional cooling
- for holding HSK-A/C shanks to ISO 12164-1/DIN 69893-1

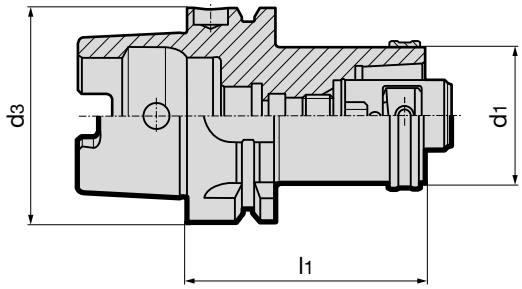

					Article no.	4355
HSK-A d_3	HSK-C d_1	l_1 mm	SW	kg		Order no.
40	32	60	2.5	0.42		**4355 32.040**
50	32	60	2.5	0.54		**4355 32.050**
50	40	70	3.0	0.69		**4355 40.050**
63	32	60	2.5	1.08		**4355 32.063**
63	40	70	3.0	1.15		**4355 40.063**
63	50	80	4.0	1.23		**4355 50.063**
80	50	90	4.0	2.00		**4355 50.080**
80	63	100	5.0	2.69		**4355 63.080**
100	50	90	4.0	2.80		**4355 50.100**
100	63	100	5.0	3.31		**4355 63.100**
100	80	120	6.0	5.20		**4355 80.100**

HSK-A/HSK-C extensions with MQL 4-point clamping sets

Product information
- suitable for MQL
- for single channel systems
- for holding HSK-A/C shanks to ISO 12164-1/DIN 69893-1

Scope of delivery
- incl. MQL 4-point clamping set article no. 4930 and adaptor for extensions
- incl. brass lock ring article no. 4953

- order coolant supply set article no. 4949 separately:
- order MQL coolant supply set separately:
  - for automatic tool change article no. 4939 (HSK32 article no. 4508)
  - for manual tool change article no. 4940 (HSK32 article no. 4513)

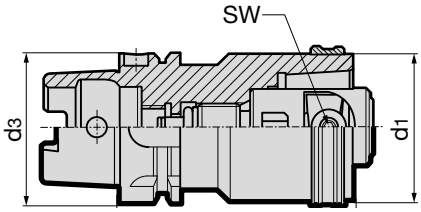

MQL 1 BY GÜHRING

	Article no.	4350	
HSK-A/HSK-C d_1 / d_3	l_1 mm	SW	kg	Order no.
32	60	2.5	0.30	**4350 60.032**
40	80	3.0	0.70	**4350 80.040**
50	80	4.0	1.00	**4350 80.050**
50	100	4.0	1.30	**4350 100.050**
63	100	5.0	2.10	**4350 100.063**
63	140	5.0	3.10	**4350 140.063**
80	120	6.0	4.20	**4350 120.080**
80	160	6.0	5.70	**4350 160.080**
100	140	8.0	7.70	**4350 140.100**

HSK-C extensions

Product information
- incl. clamping set article no. 4958 for conventional cooling
- incl. brass lock ring article no. 4953
- for holding HSK-A/C shanks to ISO 12164-1/DIN 69893-1

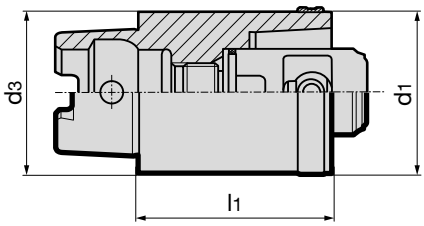

	Article no.	4351		
HSK-C d_1 / d_3	l_1 mm	SW	kg	Order no.
25	40	2.5	0.14	**4351 40.025**
32	40	2.5	0.22	**4351 40.032**
40	50	3.0	0.44	**4351 50.040**
50	60	4.0	0.81	**4351 60.050**
63	80	5.0	1.74	**4351 80.063**

Product information

- for the installation of 4-point clamping sets, if there are difficulties locking the spindle

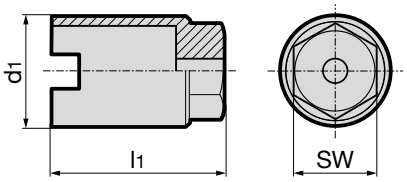

				Article no.	4963
for HSK-C	d_1 mm	l_1 mm	SW		Order no.
25	17.5	25	15		**4963 19.000**
32	22.5	32	17		**4963 24.000**
40	28.0	40	19		**4963 30.000**
50	36.0	50	24		**4963 38.000**
63	45.0	60	30		**4963 48.000**
80	56.0	80	36		**4963 60.000**
100	70.0	95	36		**4963 75.000**

PROCESS RELIABILITY RATHER THAN NERVE TINGLING

Gühring inspection and measuring instruments

HSK
clamping technology

- simple. quick and accurate measuring of the claming force of your chucks
- direct measuring of the coolant flow pressure and volume
- wireless determination of the MQL response times

Please request our "GM 300 inspection and measuring instruments" brochure.

POWERCLAMP

TECHNICAL INFORMATION AND ADVANTAGES

Gühring's PowerClamp system is designed for universal applications in transfer lines, machining centres, turning centres and setting equipment.

Due to high pull forces the PowerClamp is suitable for low-speed operations in heavy machining.

Advantages:

- simple assembly thanks to uncomplicated spindle contour
- few moving components, therefore optimal force transmission
- high clamping force, therefore excellent bending resistance
- secure ejector function
- internal coolant supply
- coolant sealing from p > 6 bar to max. 80 bar

Internal contour of spindle

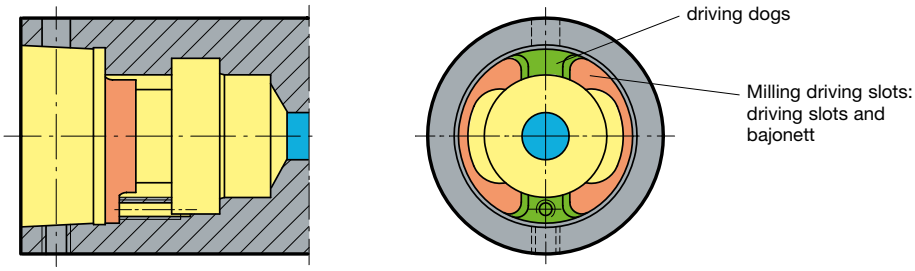

Installation and principle of operation

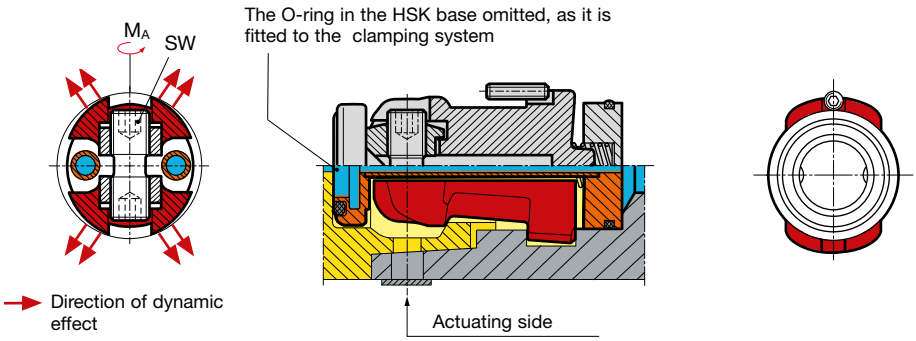

Bending torsional and tightening moment for PowerClamp

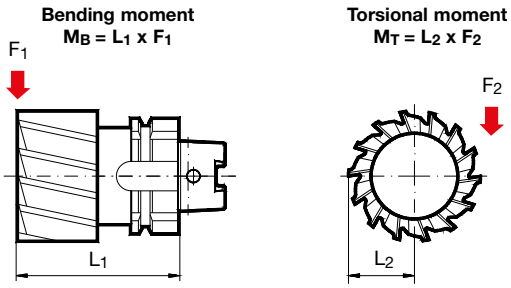

① We recommend M_A max. for rough machining and milling operations. For drilling and reaming operations a lower deviation of M_A max. up to 30% is permissible. Please check the torque with a torque wrench.
② Depending on temperature and lubricating conditions these values can be up to 15% lower.
③ Due to the screwed connection. M_T max. can be lower with adaptors.

HSK-C	**max.** torque M_A [Nm] ①	Key size	**max.** drawing force [kN] ②	**max.** linear bending moment M_B [Nm] ②	**max.** transferrable torsional moment M_T [Nm] ② ③
25	1.5	2.0	5	45	50
32	2.5	2.5	8	74	120
40	6.0	3.0	18	213	360
50	10.0	4.0	27	431	1000
63	15.0	5.0	35	703	1300
80	25.0	6.0	50	1100	2800
100	50.0	8.0	60	1620	4800

General notes: Our manual clamping sets must not be operated with motor-driven tools (impulse screwdriver or similar). The hexagonal key should not exceed the key size over its entire length. this largely prevents excessive torque being transferred. We recommend the T-handle hexagonal key, article no. 4912. For accurate setting of the maximum torque and achieving the maximum interface rigidity. we recommend the application of a torque wrench, article no. 4915 with hexagonal sockets, article no. 4916. Production drawings of the spindle contour to suit direct installation are available on request, including .dxf.

Application examples

Spindle interface

integrated spindle adaptor

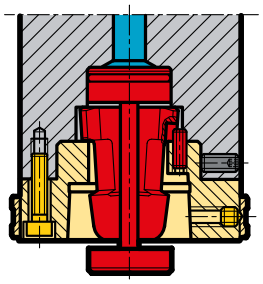

Direct installation in spindle

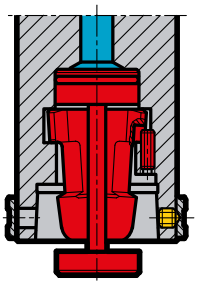

Spindle adaptor (in front)

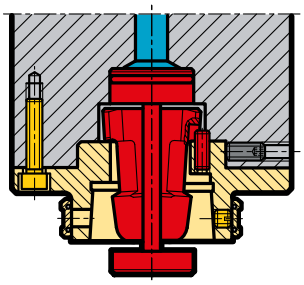

Adaptor

DIN ISO 7388-1 form AD

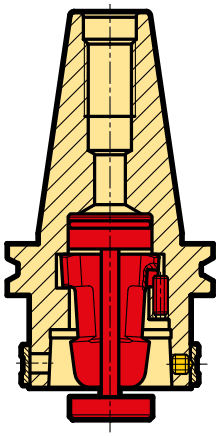

MAS/BT

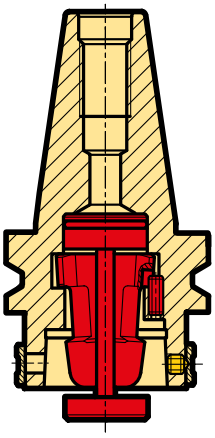

HSK-A extention

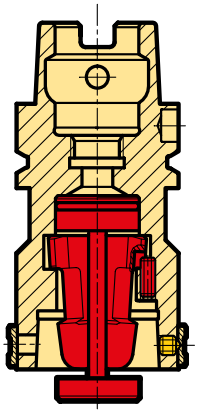

HSK-A reduction

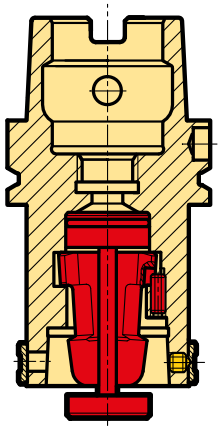

Tool holder for turning centers

adaptor (in front) on VDI angle holder

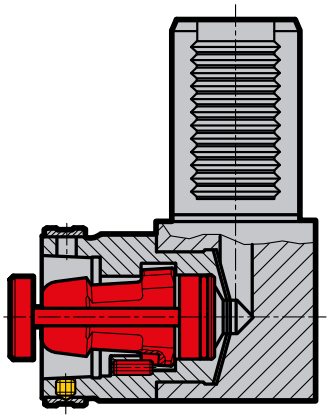

adaptor (in front) on VDI vertical holder

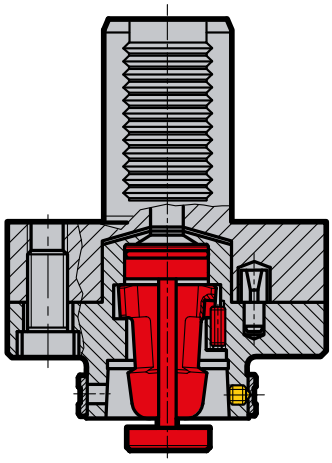

PowerClamp sets

Product information

- the internal coolant supply is via the cage. It is floating mounted and ensures a coolant seal above 6 bar pressure.
- for a coolant pressure up to 80 bar
- the coolant sets are not suitable for MQL
- for clamping HSK-A/C shanks to ISO 12164-1/DIN 69893

Scope of delivery

- including installation and operating instructions
- incl. threaded pin article no. 4551

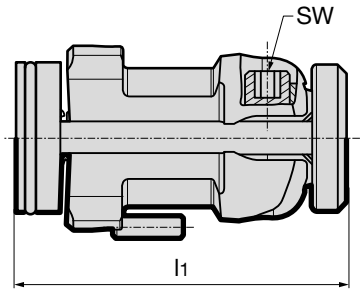

				Article no.	4554
HSK-C	l_1 mm	SW	kg		Order no.
25	32.1	2.0	0.02		**4554 19.000**
32	41.6	2.5	0.05		**4554 24.000**
40	49.7	3.0	0.09		**4554 30.000**
50	62.2	4.0	0.18		**4554 38.000**
63	74.1	5.0	0.37		**4554 48.000**
80	96.1	6.0	0.73		**4554 60.000**
100	117.0	8.0	1.36		**4554 75.000**

Component parts for PowerClamp sets article no. 4554

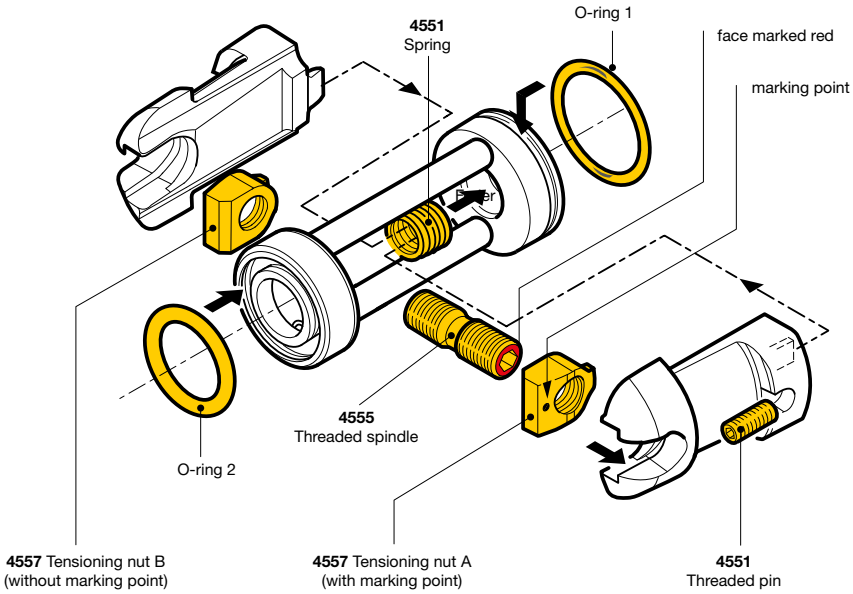

			Article no.	4557	4555	4551
HSK-C	O-ring 1	O-ring 2		Tensioning nut set	Threaded spindle	Spring and threaded pin
	mm	mm		Order no.	Order no.	Order no.
25	11.5 x 1.0	7.0 x 2.0		**4557 1.019**	**4555 2.019**	**4551 3.019**
32	14.0 x 1.5	10.0 x 2.5		**4557 1.024**	**4555 2.024**	**4551 3.024**
40	18.0 x 1.5	12.5 x 2.5		**4557 1.030**	**4555 2.030**	**4551 3.030**
50	22.0 x 1.5	16.0 x 3.0		**4557 1.038**	**4555 2.038**	**4551 3.038**
63	28.0 x 2.0	21.0 x 3.0		**4557 1.048**	**4555 2.048**	**4551 3.048**
80	36.0 x 3.0	25.0 x 4.0		**4557 1.060**	**4555 2.060**	**4551 3.060**
100	45.0 x 3.0	32.0 x 5.0		**4557 1.075**	**4555 2.075**	**4551 3.075**

HSK adaptors (in front)

Product information
- for the transferable torsional moment the interface between spindle and flange has to be taken into consideration.
- for conventional cooling from 6 to max. 80 bar
- for holding HSK-A/C shanks to ISO 12164-1/DIN 69893
- radially alignable

Scope of delivery
- incl. clamping set article no. 4554
- incl. brass lock ring article no. 4953
- incl. indexing pin and retention screws

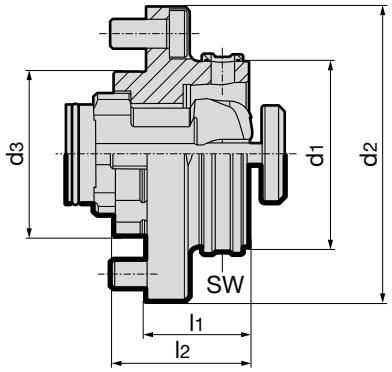

						Article no.	4581
HSK-C d_1	d_2 mm	d_3 mm	l_1 mm	l_2 mm	SW	kg	Order no.
25	45	23	20.0	26.5	2.0	0.17	**4581 19.000**
32	55	28	17.5	23.0	2.5	0.22	**4581 24.000**
40	63	36	22.5	29.0	3.0	0.40	**4581 30.000**
50	80	46	27.5	36.0	4.0	0.74	**4581 38.000**
63	100	56	35.0	46.0	5.0	1.50	**4581 48.000**
80	125	66	45.0	58.0	6.0	2.94	**4581 60.000**
100	160	86	57.0	72.0	8.0	5.90	**4581 75.000**

HSK spindle adaptors (in front)

Product information
- for the transferable torsional moment the interface between spindle and flange has to be taken into consideration.
- for conventional cooling from 6 to max. 80 bar
- radially alignable
- for holding HSK-A/C shanks to ISO 12164-1/DIN 69893

Scope of delivery
- incl. clamping set article no. 4554
- incl. brass lock ring article no. 4953
- incl. indexing pin and retention screws

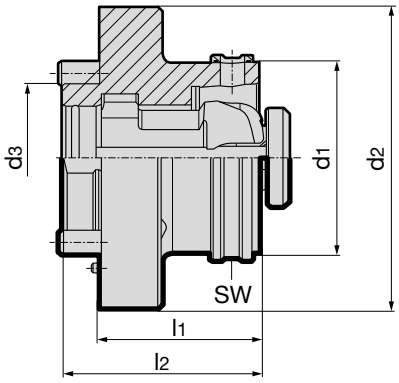

						Article no.	4586
HSK-C d_1	d_2 mm	d_3 mm	l_1 mm	l_2 mm	SW	kg	Order no.
40	70	35	32.5	42.5	3	0.55	**4586 30.000**
50	80	40	43.0	53.0	4	1.00	**4586 38.000**
63	100	50	53.0	65.0	5	1.90	**4586 48.000**
80	117	60	73.0	85.0	6	3.60	**4586 60.000**
100	140	80	94.0	106.0	8	7.20	**4586 75.000**

HSK adaptors for turning centres

Product information
- for fixed tools
- incl. setting element to eliminate drive play with vertical tools
- for the transferable torsional moment the interface between spindle and flange has to be taken into consideration.
- for conventional cooling from 6 to max. 80 bar
- for holding HSK-A/C shanks to ISO 12164-1/DIN 69893-1

Scope of delivery
- incl. clamping set article no. 4554
- incl. brass lock ring article no. 4953
- incl. indexing pin and retention screws

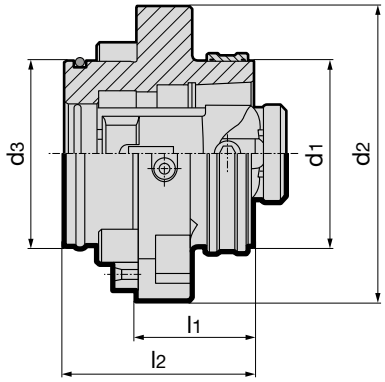

									Article no.	4582
HSK-C d_1	d_2 mm	d_3 mm	l_1 mm	l_2 mm	l_3 mm	SW	kg	Version		Order no.
50	84	50	35	55.0	55	4	0.98	links		**4582 38.100**
50	84	50	35	55.0	55	4	0.98	rechts		**4582 38.200**
63	100	63	40	64.5	70	5	1.74	links		**4582 48.100**
63	100	63	40	64.5	70	5	1.74	rechts		**4582 48.200**

Short HSK spindle adaptors (integrated)

Product information
- with larger axial plane
- for the transferable torsional moment the interface between spindle and flange has to be taken into consideration.
- for conventional cooling from 6 to max. 80 bar
- radially alignable
- for holding HSK-A/C shanks to ISO 12164-1/DIN 69893-1

Scope of delivery
- incl. clamping set. article no. 4554
- incl. brass lock ring article no. 4953
- incl. threaded pin article no. 4551 and tensioning screws

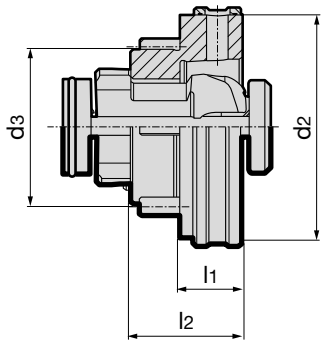

							Article no.	4584
for HSK-C	d_2 mm	d_3 mm	l_1 mm	l_2 mm	SW	kg		Order no.
32	40	27.0	12.5	21.10	2.5	0.16		**4584 24.000**
40	50	33.5	15.0	25.70	3.0	0.28		**4584 30.000**
50	63	42.0	17.5	32.10	4.0	0.55		**4584 38.000**
63	80	55.0	22.5	40.05	5.0	1.14		**4584 48.000**
80	100	68.0	27.5	51.40	6.0	2.20		**4584 60.000**
100	125	88.0	30.0	64.00	8.0	4.00		**4584 75.000**

SK / HSK-C basic adaptors

Product information
- ISO taper to DIN 69871 form AD
- Form AF on request
- Order no. 50.100 only applies to pre-setting unit
- for conventional cooling from 6 to max. 80 bar
- for holding HSK-A/C shanks to ISO 12164-1/DIN 69893-1

Scope of delivery
- incl. clamping set article no. 4554
- incl. brass lock ring article no. 4953
- order clamping key and pull studs article no. 4925 or 4926 separately

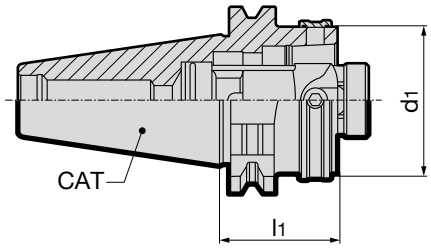

				Article no.	4512
ISO taper	HSK-C d_1	l_1 mm	SW	kg	**Order no.**
40	32	40	2.5	0.89	**4512 40.032**
40	40	40	3.0	0.90	**4512 40.040**
40	50	40	4.0	0.91	**4512 40.050**
40	63	70	5.0	1.38	**4512 40.063**
50	32	40	2.5	2.65	**4512 50.032**
50	40	40	3.0	2.67	**4512 50.040**
50	50	40	4.0	2.71	**4512 50.050**
50	63	40	5.0	2.73	**4512 50.063**
50	80	70	6.0	3.70	**4512 50.080**
50	100	100	8.0	4.87	**4512 50.100**

MAS/BT / HSK-C basic adaptors

Product information
- MAS/BT to DIN ISO 7388-2 form JD
- for conventional cooling from 6 to max. 80 bar
- for holding HSK-A/C shanks to ISO 12164-1/DIN 69893-1

Scope of delivery
- incl. clamping set article no. 4554
- incl. brass lock ring article no. 4953
- order clamping key and pull studs article no. 4927 or 4928 separately

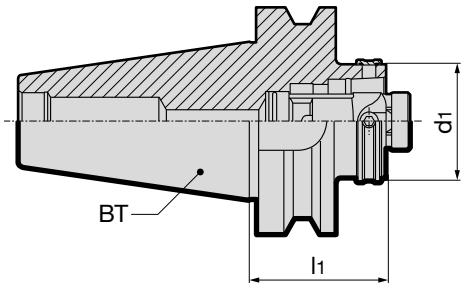

				Article no.	4514
BT	HSK-C d_1	l_1 mm	SW	kg	**Order no.**
40	40	40	3	0.92	**4514 40.040**
40	50	40	4	0.95	**4514 40.050**
40	63	80	5	2.00	**4514 40.063**
50	40	50	3	2.90	**4514 50.040**
50	50	60	4	3.15	**4514 50.050**
50	63	60	5	3.69	**4514 50.063**

Product information
- ANSI/CAT to ASME B5.50
- for conventional cooling

Scope of delivery
- incl. clamping set
- order clamping key and pull studs with inch thread separately

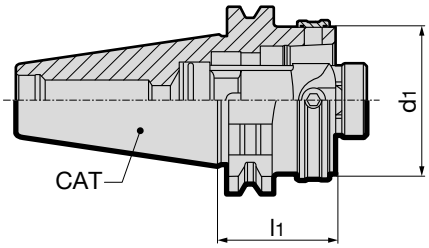

					Article no.	4003
CAT	form	HSK-C d_1	l_1 mm	SW	kg	**Order no.**
40	JD (AD)	63	75	5	1,40	**4003 40.063**
50	JD/JF (AD/B)	63	75	5	2,70	**4003 50.063**

HSK-A/HSK-C extensions

Product information
- incl. clamping set article no. 4554
- incl. brass lock ring article no. 4953
- for conventional cooling from 6 to max. 80 bar
- HSK-A to ISO 12164-1/DIN 69893
- for holding HSK-A/C shanks to ISO 12164-1/DIN 69893

Scope of delivery
- order coolant supply set article no. 4949 separately

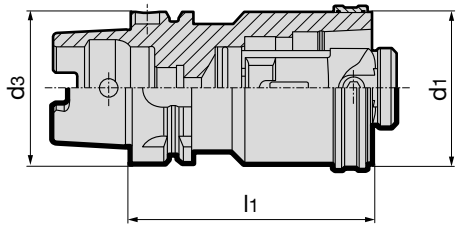

				Article no.	4549
HSK-A/ HSK-C d_1 / d_3	l_1 mm	SW	kg		Code-Nr.
32	60	2.5	0.26		**4549 60.032**
40	80	3.0	0.65		**4549 80.040**
50	80	4.0	0.90		**4549 80.050**
50	100	4.0	1.13		**4549 100.050**
63	100	5.0	1.84		**4549 100.063**
63	140	5.0	2.30		**4549 140.063**
80	120	6.0	3.90		**4549 120.080**
80	160	6.0	5.40		**4549 160.080**
100	140	8.0	7.80		**4549 140.100**
100	200	8.0	10.54		**4549 200.100**

Skid rings for short spindles to DIN 69002-3

Product information
- for short spindles to DIN 69002-3

Scope of delivery
- incl. clamping screws and brass locking ring

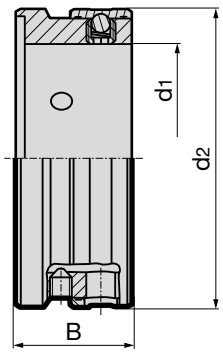

					Article no.	4976
nom. size	d_1 mm	DIN 69002-1 revolution n min^{-1} max.	d_2 mm	B		Order no.
25x20	25	10.000	35.0	15.7		**4976 20.015**
32x25	32	9.000	42.5	19.7		**4976 25.019**
32x30	32	9.000	43.5	19.7		**4976 30.019**
40x35	40	8.000	54.0	21.7		**4976 35.021**
50x45	50	7.000	68.0	24.7		**4976 45.024**
63x55	63	6.000	82.0	31.7		**4976 55.031**

Brass locking rings

Product information
- the pressure ball screw must be secured with Loctite 222

Scope of delivery
- incl. pressure ball screw article no. 4961

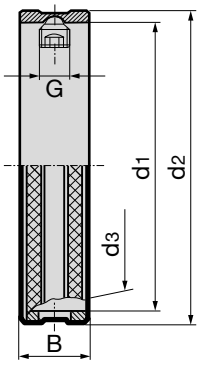

								Article no.	4953
HSK-form	for HSK-size d_1 mm	taper nom.-Ø d_3 mm	d_2 mm	B mm	incl. pressure ball screw art. no.4961	G	rev. limit		Order no.
C	25	19	28.0	7	3.500	M3.5	38.000		**4953 25.000**
C	32	24	35.0	7	4.000	M4	28.000		**4953 32.000**
C	40	30	43.5	9	5.000	M5	22.500		**4953 40.000**
C	50	38	54.0	11	6.000	M6	17.350		**4953 50.000**
C	63	48	68.0	14	8.000	M8	13.750		**4953 63.000**
C	80	60	85.0	17	10.000	M10	11.850		**4953 80.000**
C	100	75	105.0	23	12.000	M12	9.250		**4953 100.000**
D	32	19	35.0	7	3.500	M3.5	28.000		**4953 32.019**
D	40	24	43.5	9	4.000	M4	22.500		**4953 40.024**
D	50	30	54.0	11	5.000	M5	17.350		**4953 50.030**
D	63	38	68.0	14	6.000	M6	13.750		**4953 63.038**
D	80	48	85.0	17	8.000	M8	11.850		**4953 80.048**
D	100	60	105.0	23	10.000	M10	9.250		**4953 100.060**
D	125	75	130.0	23	12.000	M12	6.100		**4953 125.075**

Pressure ball screws

Product information
- Minimum order quantity 5

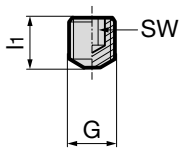

HSK 25/32

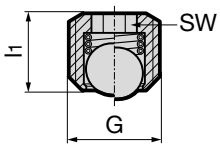

HSK 40-100

				Article no.	4961
for HSK	l_1 mm	G	SW		Order no.
25	3.4	M3.5	2.0		**4961 3.500**
32	4.3	M4	2.0		**4961 4.000**
32	4.0	M4	2.0		**4961 4.001**
40	4.6	M5	2.5		**4961 5.000**
50	5.4	M6	3.0		**4961 6.000**
63	7.0	M8	4.0		**4961 8.000**
80	9.2	M10	5.0		**4961 10.000**
100	11.4	M12	6.0		**4961 12.000**

GÜHRING REPAIR SERVICE

Save through maintenance!
Costings prove: inspection and repair is profitable!

Insufficient clamping force of hydraulic chucks can have disastrous consequences: poor cutting rates and tool life of the clamped tools, reduced surface quality of the machined workpiece and breakage of tool, holder and workpiece. Our test measurements show: one in 10 chucks displays a loss in clamping force!
Regular hydraulic chuck clamping force inspections can protect against such unwelcome and expensive consequences. Therefore, we provide a new service to ensure optimum performance of you hydraulic chucks - from any manufacturer:

1. Professional clamping force inspection
The measurement is taken quickly, without exertion of force and in the machine or equipment at your premises for your production with Gühring's SENSO 3000 clamping force measuring instrument.

2. Our repair service
If the existing clamping force is insufficient, we check the cause of the loss in clamping force, replace the necessary components, re-fill the hydraulic system and carry out a final inspection.

3. New hydraulic chucks
If the hydraulic chuck is irreparable, we will offer you a new hydraulic chuck from our current Gühring GM 300-program!

MEASURING INSTRUMENTS AND GENERAL ACCESSORIES

Measuring gauges for HSK tool shanks

To ensure sustained accuracy at HSK interfaces, we recommend comparison measuring of the geometry of HSK tool shanks and spindles at regular intervals. These checks should become more frequent with an increased change rate at the interface.

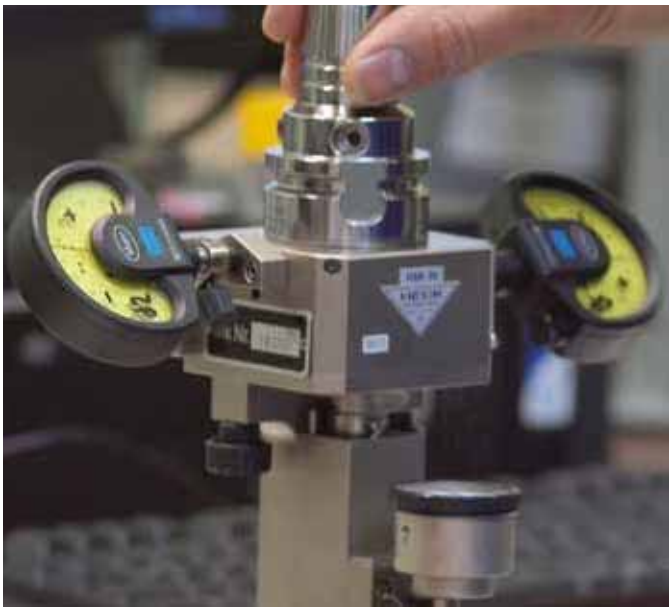

Measuring gauges for HSK tool shanks

for nominal taper diameter d_2 and d_3

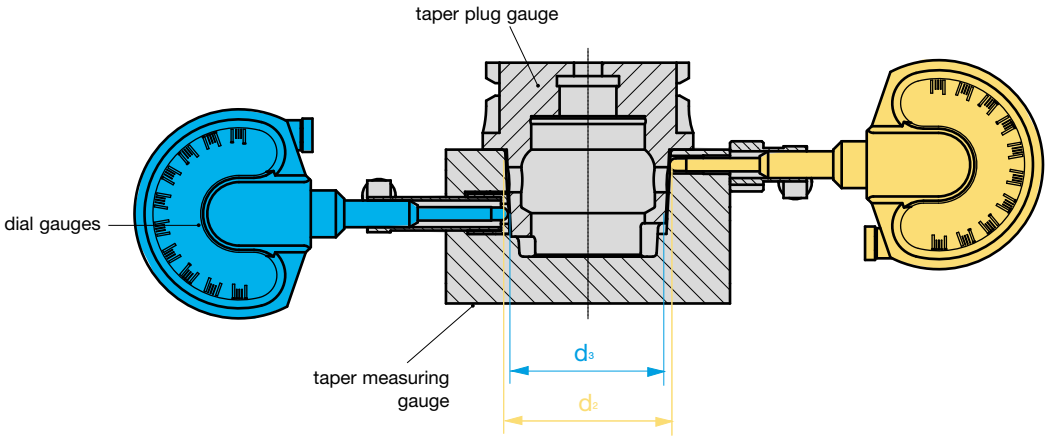

Taper measuring gauges for HSK tool shanks

Product information
- calibration on request

Scope of delivery
- incl. calibrated taper plug gauge and measuring instructions
- supplied in wooden case with inspection protocol

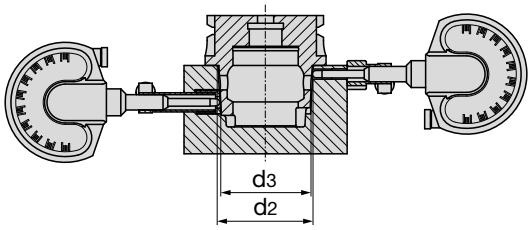

			Article no.	4968
for HSK	d_2 mm	d_3 mm		Order no.
25	19	18.4		**4968 19.100**
32	24	23.2		**4968 24.100**
40	30	29.0		**4968 30.100**
50	38	36.9		**4968 38.100**
63	48	46.5		**4968 48.100**
80	60	58.1		**4968 60.100**
100	75	72.6		**4968 75.100**

Measuring gauges for HSK clamping shoulders

Product information
- calibration on request

Scope of delivery
- incl. calibrated setting gauge and measuring instructions
- supplied in plastic case with inspection protocol

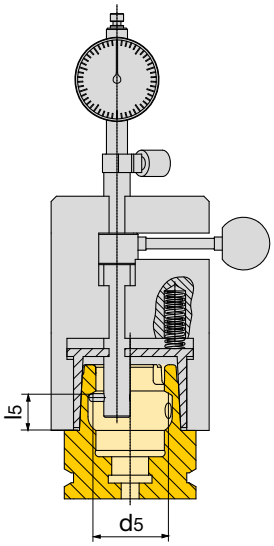

			Article no. 4978
for HSK A/C/E	l_5 mm	d_5 mm	**Order no.**
25	7.21	15	**4978 19.000**
32	8.92	19	**4978 24.000**
40	11.42	23	**4978 30.000**
50	14.13	29	**4978 38.000**
63	18.13	37	**4978 48.000**
80	22.85	46	**4978 60.000**
100	28.56	58	**4978 75.000**

Measuring gauges for HSK spindles

Product information
- calibration on request

Scope of delivery
- incl. calibrated setting gauge and measuring instructions
- supplied in a sturdy case with inspection protocol

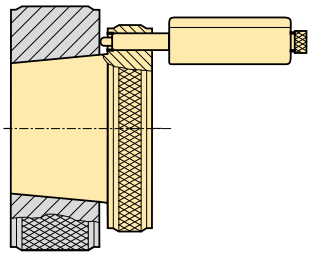

		Article no. 4969
for HSK	kg	**Order no.**
25	0.60	**4969 19.000**
32	0.91	**4969 24.000**
40	1.13	**4969 30.000**
50	1.60	**4969 38.000**
63	3.02	**4969 48.000**
80	4.94	**4969 60.000**
100	8.10	**4969 75.000**

Taper proofing bars HSK/ISO

Product information
- for concentricity testing at machine spindles
- calibration on request
- article no. 4971 125,025 only in form E
- HSK-A shank similar to ISO 12164-1/DIN 69893
- SK shank similar to DIN ISO 7388-1

Scope of delivery
- supplied in wooden case for vertical storage with inspection protocol
- for SK order pull studs article no. 4925, 4926 separately
- for BT order shortened special pull studs separately article no. 4927, 4928

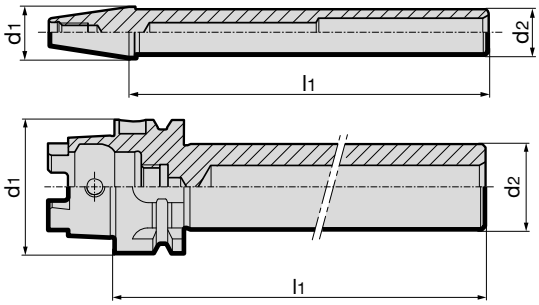

		Article no.	4970	4971
d_1	d_2 mm	l_1 mm	Order no.	Order no.
SK-40	40	320	**4970 300.040**	
SK-50	40	320	**4970 300.050**	
HSK-E25	20	140		**4971 125.025**
HSK-E32	24	180		**4971 150.032**
HSK-A40	24	180		**4971 150.040**
HSK-A50	32	236		**4971 200.050**
HSK-A63	40	346		**4971 300.063**
HSK-A80	40	346		**4971 300.080**
HSK-A100	40	349		**4971 300.100**

Balancing masters for HSK spindles

Product information
- for balancing HSK spindles clamping systems: holds the clamping elements in the clamped position
- balancing quality: G2.5 / 30,000 rev./min or U < 0.5 gmm
- HSK-C to ISO 12164-1/DIN 69893-1
- calibration on request

Scope of delivery
- supplied in wooden case with inspection protocol

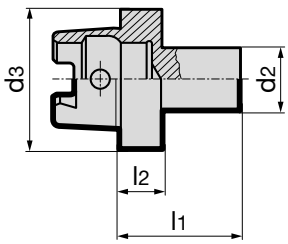

				Article no.	4975
HSK-C d_3	d_2 mm	l_1 mm	l_2 mm		Order no.
25	12	23	8		**4975 25.000**
32	12	25	10		**4975 32.000**
40	12	25	10		**4975 40.000**
50	20	37.50	12.5		**4975 50.000**
63	20	37.50	12.5		**4975 63.000**
80	20	46	16		**4975 80.000**
100	20	46	16		**4975 100.000**

Clamping force measuring instrument for HSK / SK clamping systems

The accuracy of the HSK connection does not only depend on the geometry but also on the drawing force of the HSK clamping system which plays an important part in ensuring a powerful and dimensionally accurate connection.

To ensure operational safety, a regular clamping force check of the HSK interface is recommended. An entirely mechanical clamping force measuring instrument is now available from Gühring. Its operation is based on components, which are linear adjustable in length and positioned proportional to the force. A force is associated with the alteration in length which is displayed via an analogue dial gauge.

Specifications:
- few components, therefore cost-efficient
- robust design
- battery or mains connection not required
- patented operating principle which is also adaptable to other spindle designs

Min. required pull forces for clamping systems	
taper size HSK25	2.8 kN
taper size HSK32	5 kN
taper size HSK40	6.8 kN
taper size HSK50	11 kN
taper size HSK63	18 kN
taper size HSK80	28 kN
taper size HSK100	45 kN
taper size SK/BT/CAT30	6 kN
taper size SK/BT/CAT40	12 kN
taper size SK/BT/CAT50	25 kN

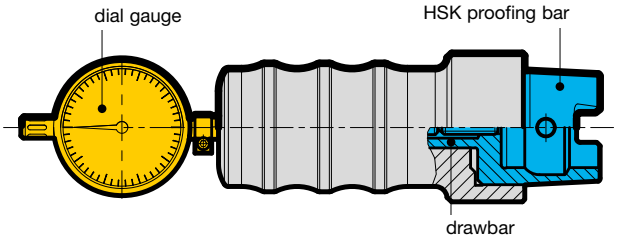

Clamping force measuring instrument

Product information
- mechanical clamping force inspection instrument for HSK/SK/BT/CAT clamping systems in machine tool spindles
- calibration on request

Scope of delivery
- supplied in wooden case with inspection protocol, calibrated, with measuring instructions

- for SK order pull studs article no. 4925, 4926 separately
- for BT order shortened special pull studs separately article no. 4927, 4928

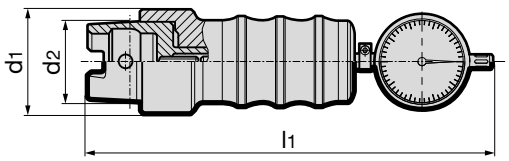

					Article no.	4973	4974
HSK-A/C/E d_1	HSK-B/D/F d_1	ISO taper/ BT/CAT	d_2 mm	l_1 mm		Order no.	Order no.
		30	32	216		**4973 30.000**	
		40	44	248		**4973 40.000**	
		50	69	285		**4973 50.000**	
25	-	-	19	187			**4974 19.000**
32	40	-	24	192			**4974 24.000**
40	50	-	30	196			**4974 30.000**
50	63	-	38	203			**4974 38.000**
63	80	-	48	235			**4974 48.000**
80	100	-	60	250			**4974 60.000**
100	125	-	75	260			**4974 75.000**

Clamping force proofing instrument Senso 3000

The hydraulic clamping technology is a well-known, proven and reliable method for the clamping of tools. Thanks to its completely closed design the system is sealed and impervious, requires extremely low maintenance and guarantees longevity. Following many years of general use, however, thermal and mechanical influences can lead to a reduction in clamping force. The result can be a poor tool life and a diminished surface quality including expensive tool breakages during machining operations.

Determining the loss of clamping force was until now extremely costly and inaccurate. It involved either determining the number of clamping screw rotations or the torque with the assistance of a proofing bar and a torque key or the expansion rate applying an accurate internal measuring instrument.

The new Gühring SENSO 3000 measuring instrument offers a precise, quick and simple as well as consistent method of measuring the clamping force. An added advantage is the mobility of the system, i.e. for measuring within machines and fixtures.

SENSO 3000 determines the clamping force of the hydraulic chuck via a pressure sensitive plug gauge. The entire length of the plug gauge is clamped in the hydraulic chuck so that when tightening the clamping screw the clamping pressure of the chuck is optimally applied. The clamping force measurement instrument displays the clamping force as a percentage value in relation to the Gühring Master recording.

The delivery scope includes the following components:
- clamping force measuring instrument with pressure sensitive plug gauge
- operation instructions
- CR 2430 type battery
- Master record for review on request

Senso 3000

Scope of delivery
- Clamping force measuring instrument with pressure sensitive plug gauge
- Operation instructions
- CR 2430 type battery
- Master recording on request

Article no.	4038
clamping diameter mm	Order no.
6.0	4038 6.000
8.0	4038 8.000
10.0	4038 10.000
12.0	4038 12.000
14.0	4038 14.000
16.0	4038 16.000
18.0	4038 18.000
20.0	4038 20.000
25.0	4038 25.000
32.0	4038 32.000

Flow rate measuring instrument PQ 3000

Gühring's PQ 3000 enables quick and simple measuring of pressure and volume of coolant flow directly in the machine using the actual tool applied.

Gühring has developed the PQ 3000 instrument for quick, simple and direct measuring of the existing coolant pressure and rate of flow for tools with internal cooling.

PQ 3000 enables the measuring of pressure and rate of flow of coolant when the actual tool is clamped directly in the stationary tool spindle. This way, it is possible to establish the real conditions of the relevant machine and tool configuration and measure the resulting actual rate of flow.

PQ 3000 provides the following information:

- pressure and volume flow of the coolant pump, the so-called P/Q characteristic curve
- possible pump or seal wear as well as rotary transmission losses
- possible narrowed cross sections in the line through machine, spindle and tool holder
- possible blocked filters
- possible narrowed cross sections resulting from deposits on the surface of the coolant ducts in the tool
- the coolant duct layout in the tool.

to identify and rectify possible weak points in the overall system, this way, the tool life of the applied tool can be optimised preventing tool breakage as well as chip congestion and jamming!

PQ 3000 povides data of sensors and indicates the measuring results on the display fixture. A data interface enables an evaluation via software on your PC (interface and software are available on request).

PQ 3000

Product information
- pressure checking range: 1 to 120 bar
- rate of flow checking range: 2 to 40 l/min
- diameter holder shank: 16 mm
- diameter range tool holder: ER 32 / 6 to 20 mm
- display for existing pressure P in bar also rate of flow volume Q in l/min

Scope of delivery
- clamping fixture and checking instrument
- display fixture with grip and connection socket
- checking data cable with connector plug, length 3 m
- ER 32 collet holder and sealing washer set for standard shanks with collets from 6 to 20 mm diameter
- clamping key for tensioning nut

	Article no.	4068
		Order no.
case complete interface and PC-Software		4068 10,000

Coolant supply measuring instrument CC 3000

With Gühring's CC 3000 you can quickly and simply check the filtering efficiency of the coolant system.

Gühring has developed the inspection instrument CC 3000 for quick, simple and direct check of the coolant filtering efficiency.

Thanks to replaceable stainless steel filters, the user can adapt the instrument specifically to the filtering of the coolant system.
CC 3000 establishes the present condition of the individual system and displays the actual filter efficiency.

In order to analyse and rectify possible weak points of the filter system, the following information is provided:

- perfect operation of the coolant filtering system
- defective filters
- insufficient filtering for the applied tool

In addition, it is possible to determine the oil concentration of the applied soluble oil with the included refractometer.

Thus, it is possible to optimise the tool life of the applied tool, to prevent tool breakage and subsequent production downtime!

CC 3000

Product information
- Master recording range of application 50 - 500 min-1
- suitable for coolant pressure up to 80 bar

Scope of delivery
- Measuring instrument with straight shank 16h6 and HB/HE clamping surfaces
- inspection instrument with HSK 63-A interface
- high-grade steel filter sizes 100, 200 and 300 µm
- refractometer including accessories
- magnifying glass, 8-fold magnification

- order high-grade steel filter size 60 µm separately
- in addition to the HSK holder we can also offer a tool holder with a 16 mm shank as a special

Article no.	4076	4077
	Order no.	Order no.
case complete	4076 10.063	
high-grade steel filter size 60, article no. 4077		4077 60.000
high-grade steel filter size 100, article no. 4077		4077 100.000
high-grade steel filter size 200, article no. 4077		4077 200.000
high-grade steel filter size 300, article no. 4077		4077 300.000

Coolant supply sets for conventional cooling

Product information
- leak-proof screwed connection tested to 80 bar
- to DIN 69895
- F = angle movability ± 1°
- for HSK-A and HSK-E shanks

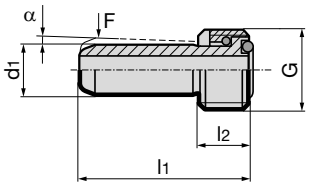

Scope of delivery
- incl. union nut and O-rings

	Article no.	4949					
for HSK-A	d_1 mm	α°	F	G	l_1 mm	l_2 mm	Order no.
32	6	1.2	5N	M10x1.0	26.0	5.5	**4949 10.032**
40	8	1.4	5N	M12x1.0	29.5	7.5	**4949 12.040**
50	10	1.3	6N	M16x1.0	33.0	9.5	**4949 16.050**
63	12	1.3	6N	M18x1.0	36.5	11.5	**4949 18.063**
80	14	1.4	7N	M20x1.5	40.0	13.5	**4949 20.080**
100	16	1.4	7N	M24x1.5	44.0	15.5	**4949 24.100**

Coolant supply sets for conventional cooling with filter

Product information
- leak-proof screwed connection tested to 80 bar
- similar DIN 69895
- with filter for contamination-free cooling
- protects against tool breakage and eases error analysis
- F = angle movability ± 1°
- for HSK-A and HSK-E shanks

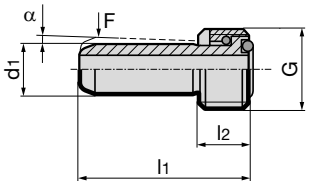

Scope of delivery
- incl. union nut and O-rings
- 100µ stainless steel fabric filter

	Article no.	4979					
for HSK-A	d_1 mm	α°	F	G	l_1 mm	l_2 mm	Order no.
32	6	1.2	5N	M10x1	26.0	5.5	**4979 10.032**
40	8	1.4	5N	M12x1	29.5	7.5	**4979 12.040**
50	10	1.3	6N	M16x1	33.0	9.5	**4979 16.050**
63	12	1.3	6N	M18x1	36.5	11.5	**4979 18.063**
80	14	1.4	7N	M20x1.5	40.0	13.5	**4979 20.080**
100	16	1.4	7N	M24x1.5	44.0	15.5	**4979 24.100**

Data coding chip

Product information
- Identification systems BIS C
- for installation space to DIN 69 873
- data carrier read/write
- 511 bytes
- operating temperature 0…+70
- protection class to IEC
- product data exchange acc. to DIN 4000
- glued in bore Ø10 H11

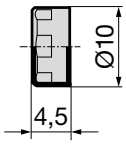

Scope of delivery
- data coding chip

- installation in chuck and additional balancing can be ordered separately

	Article no.	4955
coding chip BIS C-122-04/L		Order no.
10 x 4.5		**4955 10.000**

Sockets

Product information
- with T-handle
- for coolant supply sets for conventional cooling and MQL coolant supply unit

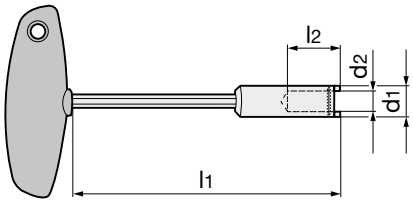

					Article no.	4911
for HSK	d1 mm	d2 mm	l1 mm	l2 mm		Order no.
32	11,0	6,1	128	23,0		**4911 24.000**
40	13,0	8,1	134	26,0		**4911 30.000**
50	15,0	10,1	134	28,0		**4911 38.000**
63	17,0	12,1	135	31,5		**4911 48.000**
80	20,0	14,1	138	32,0		**4911 60.000**
100	22,5	16,1	138	35,0		**4911 75.000**

Sockets

Product information
- suitable for torque wrench article no. 4915, drive 3/8“
- for coolant supply sets

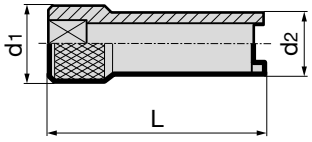

					Article no.	4910
for HSK	MA Nm	d_1 mm	d_2 mm	L mm		Order no.
32	7	20	14	60		**4910 24.000**
40	11	20	16	60		**4910 30.000**
50	15	20	18	60		**4910 38.000**
63	20	20	18	60		**4910 48.000**
80	25	20	20	75		**4910 60.000**
100	30	22	22	80		**4910 75.000**

Installation of coolant supply sets 4949/4979

1. The HSK holder must be clean, free of swarf and undamaged.
2. Grease the O-rings prior to assembly.
3. Centrally insert the complete coolant supply set (coolant pipe, union nut and 2 O-rings) in the HSK with the assistance of the socket spanner.
4. Screw in the coolant supply set/coolant supply unit and tighten (see table for torque figures)
5. Check coolant pipe for radial mobility.

Torque figures

for HSK	MA Nm
32	7
40	11
50	15
63	20
80	25
100	30

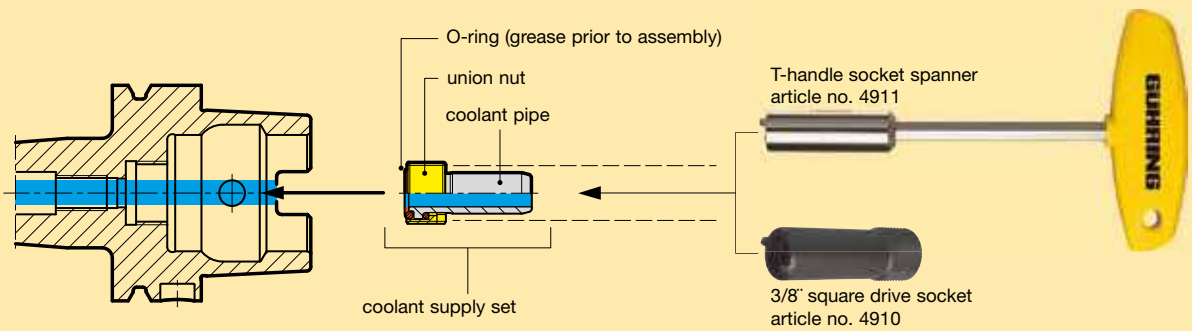

HSK cleaning mandrels

Product information

- for cleaning internal tapers and the end faces on HSK
- by cleaning the contact surfaces accuracy, clamping torque and tool life of interfaces are improved
- the taper wipers are available in 3 designs, suitable for HSK and SK spindles and HPC precision chucks

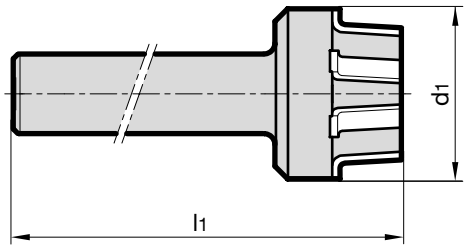

taper type	d_1 mm	l_1 mm	Article no. 4914 Order no.
HSK-A/C-25	33	114	**4914 19.000**
HSK-A/C-32	35	138	**4914 24.000**
HSK-A/C-40	45	142	**4914 30.000**
HSK-A/C-50	53	152	**4914 38.000**
HSK-A/C-63	66	168	**4914 48.000**
HSK-A/C-80	93	178	**4914 60.000**
HSK-A/C-100	103	199	**4914 75.000**
HPC 14	24	160	**4914 14.000**
HPC 20	24	156	**4914 20.000**
HPC 25	40	195	**4914 25.000**
HPC 32	42	170	**4914 32.000**
SK/BT30	35	168	**4914 30.030**
SK/BT40	48	188	**4914 40.000**
SK/BT50	75	240	**4914 50.000**

HSK cleaning caps

Product information

- for cleaning the external taper and face

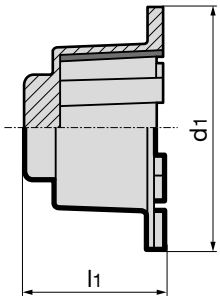

for HSK-A/C/E	d_1 mm	l_1 mm	Article no. 4947 Order no.
40	53	36	**4947 1.040**
50	66	42	**4947 1.050**
63	83	53	**4947 1.063**
80	103	58	**4947 1.080**
100	125	77	**4947 1.100**

Cylindrical cleaning mandrels

Product information

- for cleaning the bore of the tool holder
- i.e. hydraulic, shrink fit and HPC clamping chucks

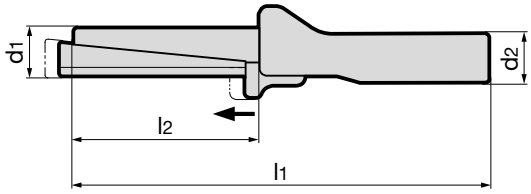

				Article no.	4918
d_1 mm	d_2 mm	l_2 mm	l_1 mm		Order no.
6	24	37	158		4918 6.000
8	24	37	158		4918 8.000
10	24	47	168		4918 10.000
12	24	47	168		4918 12.000
14	24	47	168		4918 14.000
16	24	70	176		4918 16.000
18	24	70	176		4918 18.000
20	24	70	176		4918 20.000
25	24	80	186		4918 25.000
32	30	100	221		4918 32.000
40	30	105	226		4918 40.000

HSK-C sealing plugs

Product information

- with high coolant pressure applications, it is imperative to seal the spindle with the sealing plug for safety reasons when the machine spindle is not fitted with a tool.
  The sealing plug protects the spindle from contamination.

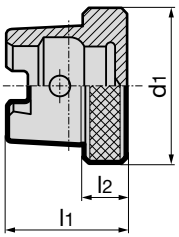

					Article no.	4985
HSK-C	d_1 mm	l_1 mm	l_2 mm	kg		Order no.
32	34	26.0	10.0	0.07		4985 32.000
40	42	30.0	10.0	0.11		4985 40.000
50	52	37.5	12.5	0.23		4985 50.000
63	65	44.5	12.5	0.39		4985 63.000
80	82	56.0	16.0	0.81		4985 80.000
100	102	66.0	16.0	1.36		4985 100.000

Tool setting fixture

Product information
- for HSK shanks HSK 32, 40, 50 and 63, form A, C, E and F
- the HSK shanks are clamped vertically and horizontally at the collar. Therefore, all tapers with the same diameter of the collar can be clamped with one fixture.

Scope of delivery
- incl. holder adaptors

				Article no.	4946
for shanks	length mm	width mm	height mm	kg	Order no.
HSK-32-A+C+E	260	130	160	9	**4946 450.032**
HSK-40-A+C+E+F	260	130	160	9	**4946 450.040**
HSK-50-A+C+E+F	260	130	160	9	**4946 450.050**
HSK-63-A+C+E+F	260	130	160	9	**4946 450.063**

Tool setting fixture

Product information
- the HSK shank remains in vertical position in the tool setting fixture by its own weight.
  The torque is transmitted through tang at the end of the taper.
- All taper types of equal size, as e.g. DIN 69871 /DIN 2080 /MASBT and D-BT can be clamped without changing the adaptors only through axial adjusting of the clamping spindle

Scope of delivery
- incl. interchangeable discs article no. 4991

				Article no.	4990
for shanks	length mm	width mm	height mm	kg	Order no.
BT-/SK-40	260	130	160	9	**4990 400.040**
BT-/SK-50	260	130	160	9	**4990 400.050**
HSK-63-A+C	260	130	160	9	**4990 450.063**
HSK-80-A+C	260	130	160	9	**4990 450.080**
HSK-100-A+C	260	130	160	9	**4990 450.100**

Interchangeable discs

Product information
- for tool setting fixture, article no. 4990

Scope of
- 1 pair

			Article no.	4991
for shanks	for article no.	kg	Order no.	
BT-/SK-40	4990	1.50	**4991 400.100**	
BT-/SK-50	4990	1.50	**4991 400.200**	
HSK-32-A+C+E+F	4946	0.82	**4991 450.100**	
HSK-32-A+C+E+F	4946	0.85	**4991 450.200**	
HSK-32-A+C+E+F	4946	0.09	**4991 450.300**	
HSK-63-A+C	4990	0.12	**4991 450.400**	
HSK-80-A+C	4990	0.27	**4991 450.500**	
HSK-100-A+C	4990	0.46	**4991 450.600**	

Torque wrenches

Product information

- with ratchet
- torque range 1…200 Nm; with automatic short distance release; can be heard, seen and felt when the set value is reached.
  Release accuracy ± 4% of the scale value.

- type “D” is pre-set to 12 Nm suitable for our HPC chucks article no. 4300, 4301, 4243, 4244

type A type D type E type B type C

				Article no.	**4915**	**4987**	**4988**	**4989**
type	drive	L mm	torque Nm		**Order no.**	**Order no.**	**Order no.**	**Order no.**
A	1/4“	–	0.4-1		**4915 1.001**			
A	1/4“	142	0.5-2		**4915 2.000**			
A	1/4“	–	1.5-3		**4915 3.000**			
A	1/4“	160	0.8-5		**4915 5.001**			
A	1/4“	–	2.0-7		**4915 8.000**			
D	1/4“	–	10			**4987 10.000**		
E	1/4“	–	0.4-14				**4988 14.000**	
B	3/8“	390	10-50					**4989 50.000**
C	1/2“	514	40-200					**4989 200.000**

Socket/attachments

Product information

- for hexagon socket screws
- Type D for HPC clamping chuck

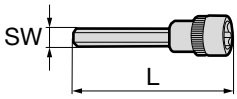

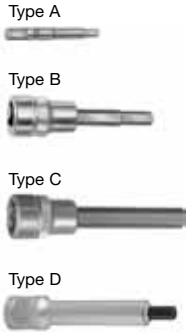

Type A: 1/4“-hexagon drive
Type B: 3/8“-square drive
Type C: 1/2“-square drive
Type D: 1/4“-square drive

				Article no.	**4916**
SW	drive	L mm	torque wrenches type		**Order no.**
2	1/4“	50	A		**4916 2.019**
2.5	1/4“	50	A		**4916 2.524**
3	1/4“	50	A		**4916 3.030**
3	3/8“	52	B		**4916 3.038**
4	1/4“	55	D		**4916 4.000**
4	3/8“	100	B		**4916 4.038**
5	3/8“	100	B		**4916 5.048**
6	3/8“	100	B		**4916 6.060**
8	3/8“	100	B		**4916 8.075**
6	1/2“	120	C		**4916 6.038**
8	1/2“	120	C		**4916 8.048**
10	1/2“	140	C		**4916 10.060**
12	1/2“	140	C		**4916 12.000**

Hexagon clamping keys

Product information

- for hexagon socket screws
- with ergonomic handle for the safe handling of our clamping devices
- special key order no. 4912 4.600 for HPC clamping chuck

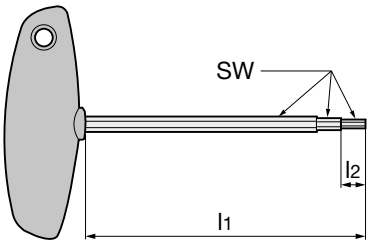

Article no. **4912**

SW	l1 mm	l2 mm	Type	Order no.
2.0	100	100	A	**4912 2.000**
2.5	100	100	A	**4912 2.500**
3.0	100	100	A	**4912 3.000**
3/4/5/6	100	100	C	**4912 3.456**
4.0	100	100	A	**4912 4.000**
4/6	100	100	C	**4912 4.600**
5.0	100	100	A	**4912 5.000**
6.0	100	100	A	**4912 6.000**
8.0	100	100	A	**4912 8.000**
10.0	100	100	A	**4912 10.000**
12.0	100	100	A	**4912 12.000**
2.5	200	200	A	**4912 2.501**
3.0	200	200	A	**4912 3.001**
4.0	200	200	A	**4912 4.001**
5.0	200	200	A	**4912 5.001**
6.0	200	200	A	**4912 6.001**
7.0	200	200	A	**4912 7.001**
8.0	200	200	A	**4912 8.001**
1.5	150	2.5	B	**4912 1.500**
2.0	150	2.5	B	**4912 2.001**
2.5	120	3.0	B	**4912 2.502**
3.0	150	3.8	B	**4912 3.002**
4.0	150	4.5	B	**4912 4.002**
2.5	57	57	C	**4912 2.509**

Hexagon clamping key

Product information

- for hexagon socket screws

Article no. **4921**

for threaded pin article no. 4551	SW	Order no.
HSK 25	0,9	**4921 0.900**
HSK 32	1,3	**4921 1.300**
HSK 40	1,5	**4921 1.500**

Pull studs ISO taper DIN ISO 7388-3 form AD

Product information

- for ISO taper tool holders to DIN ISO 7388-3 form AD
- through hole for central coolant supply

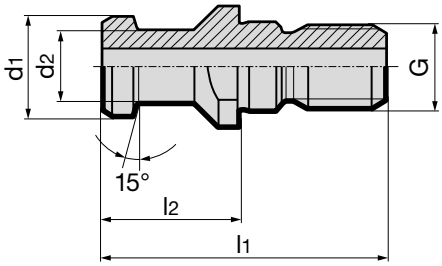

						Article no.	4925
for ISO taper	d_1 mm	d_2 mm	d_3 mm	l_1 mm	l_2 mm	G	Order no.
30	13.0	9.0	-	44.0	24	M12	**4925 30.000**
40	19.0	14.0	7.0	54.0	26	M16	**4925 40.000**
50	28.0	21.0	11.5	74.0	34	M24	**4925 50.000**

Pull studs ISO taper DIN ISO 7388-3 form AF

Product information

- for ISO taper tool holders to DIN ISO 7388-3 form AF
- sealed for coolant supply above the collar

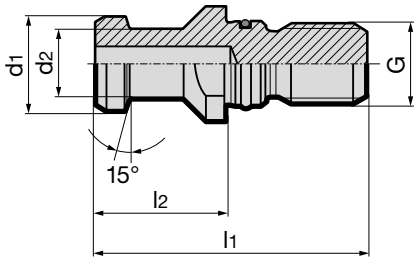

						Article no.	4926
for ISO taper	d_1 mm	d_2 mm	l_1 mm	l_2 mm	G		Order no.
30	13.0	9.0	44.0	24	M12		**4926 30.000**
40	19.0	14.0	54.0	26	M16		**4926 40.000**
50	28.0	21.0	74.0	34	M24		**4926 50.000**

Pull studs BT DIN ISO 7388-3

Product information

- for tool holders to DIN ISO 7388-2 (MAS 403 BT)

- 45° clamping shoulder angle
- Design JD sealed with through hole
- Design JF without through hole

- 40.100 shortened and sealed, for draw-in clamping force test equipment article no. 4973

form JF

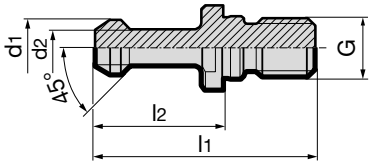

form JD

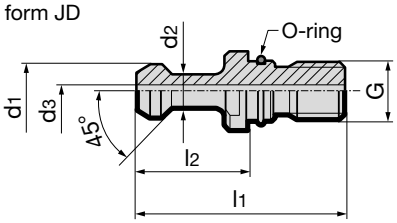

								Article no.	4927
for BT	d_1 mm	d_2 mm	d_3 mm	l_1 mm	l_2 mm	G	form		Order no.
30	11.0	7.0	-	43.0	23	M12	JF		**4927 30.000**
40	15.0	10.0	-	57.0	32	M16	JF		**4927 40.100**
40	15.0	10.0	-	60.0	35	M16	JF		**4927 40.000**
50	23.0	17.0	-	85.0	45	M24	JF		**4927 50.000**
30	11.0	7.0	2.5	43.0	23	M12	JD		**4927 30.001**
40	15.0	10.0	4.0	60.0	35	M16	JD		**4927 40.001**
50	23.0	17.0	8.5	85.0	45	M24	JD		**4927 50.001**

Pull studs BT DIN ISO 7388-3

Product information

- for tool holders to DIN ISO 7388-2 (MAS 403 BT)

- 60° clamping shoulder angle
- Design JD sealed with through hole
- Design JF without through hole

- 40.100 shortened and sealed, for draw-in clamping force test equipment article no. 4973

form JF

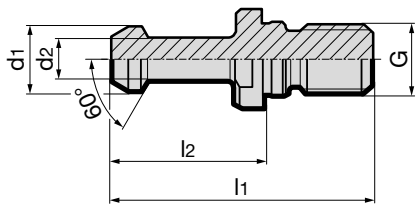

form JD

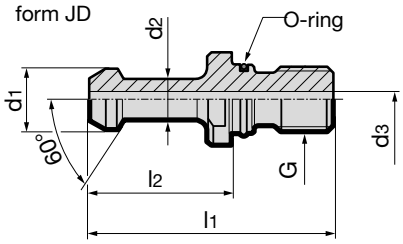

								Article no.	4928
for BT	d_1 mm	d_2 mm	d_3 mm	l_1 mm	l_2 mm	G	form		Order no.
30	11.0	7.0	-	43.0	23	M12	JF		**4928 30.000**
40	15.0	10.0	-	57.0	32	M16	JF		**4928 40.100**
40	15.0	10.0	-	60.0	35	M16	JF		**4928 40.000**
50	23.0	17.0	-	85.0	45	M24	JF		**4928 50.000**
30	11.0	7.0	2.5	43.0	23	M12	JD		**4928 30.001**
40	15.0	10.0	4.0	60.0	35	M16	JD		**4928 40.001**
50	23.0	17.0	8.5	85.0	45	M24	JD		**4928 50.001**
60	32.0	24.0	12.0	115.0	65	M30	JD		**4928 60.001**

TECHNICAL INFORMATION

Clamping chucks / tool holders for straight tool shanks	TSG 3000 / shrink fit chucks / shrink fit extensions	Hydraulic chucks / HMC 3000 / reduction bushes
Characteristics	maximum concentricity; very slender non-interference; good rigidity; high clamping force; modular lenghtening; patented dampening screw ensures concentricity	high dampening with maximum concentricity; simple handling; flexible application thanks to reduction bushes also with GÜHROJET
Main application	drilling, countersinking, milling, reaming, universal and HSC applicatio	reaming, drilling, countersinking, HSC application, light milling
Main feature	accurate and universal; slender; high clamping force	simple handling
Concentricity	< 3µm	< 3µm
with 5xD	< 5µm	< 5µm
Clamping force	very high	very high
Rigidity	very high	high
Dampening	low	very high
Interference contour	small / minimal	medium
Handling	good	very good / very flexible
Actuation	shrink fit device e.g. GSS 2000 article no. 4742	hexagon key e.g. article no. 4912

HPC precision power chucks / clamping sleeves	Straight shank holders “Weldon” / “Whistle-Notch”	Collet chucks ER
maximum clamping force and rigidity thanks to mechancal clamping transmission; high accuracy and balancing quality; flexible application thanks to clamping sleeves also with GÜHROJET	robust, cost-efficient clamping chuck for heavy machining in the lower speed and accuracy range	very flexible clamping chuck for various shank dimensions and tolerances; for lower level machining tasks
heavy HPC and fast accurate HSC milling, drilling, universal application	roughing, milling, drilling	light machining, centering, chamfering, drilling, threading; intermediate shank dimensions
highest clamping force and rigidity	simple operation; secure clamping	highly flexible
< 3µm	< 10µm	< 10µm
< 8µm	< 25µm	< 20µm
extremely high	very safe	medium
extremely high	very high	low
high	low	high
medium	large	large (mini = small)
very good / flexible	good	good
hexagon key / torque wrench e.g. article no. 4915 + 4916 type D	hexagon key torque: information at clamping screw article no. 4903	hook spanner max. torque: information at clamping screw article no. 4903

TECHNICAL INFORMATION AND ADVANTAGES

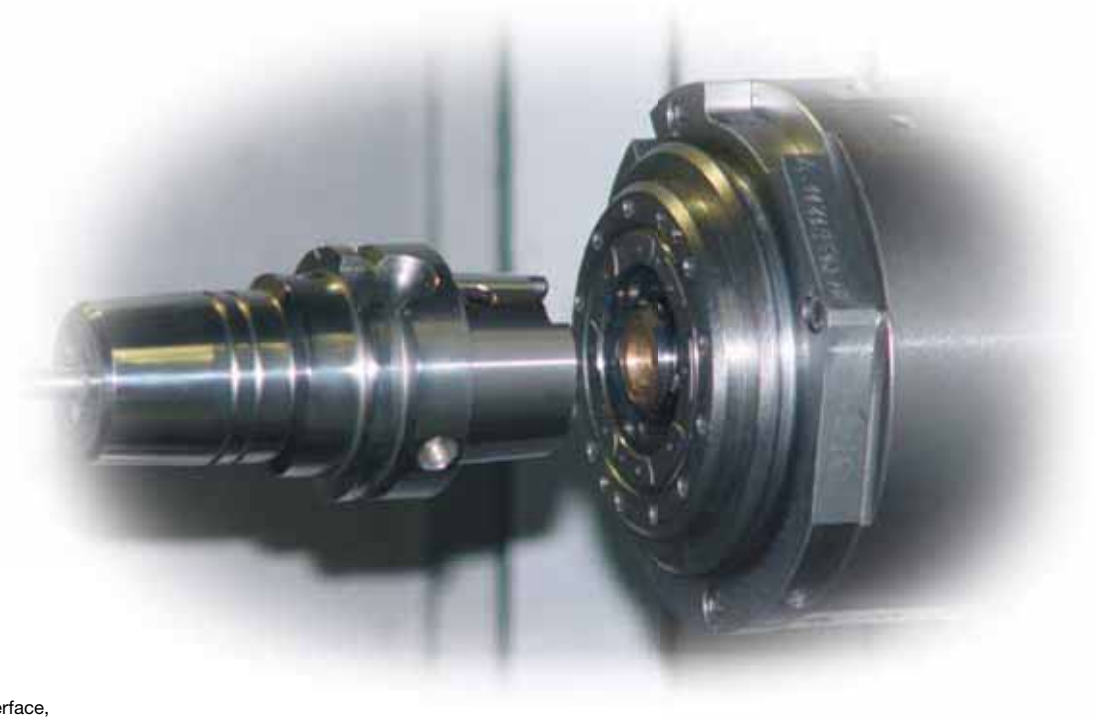

Fig. 1:
HSK-A 63 interface,
automatic tool change

Our modular tooling system GM 300 has been developed for the application of rotating and stationary tools. 1987 we devloped the GM 300 coupling. Standardisation for this interface (DIN 69893) was obtained in1991. Since 12/2001 the HSK interface is also standard to ISO 12164-1/-2. The unique design of the clamping method offers not only an ideal interface for manual clamping within the tooling system, but also an ideal interface for automatic clamping directly to the machine spindle (fig. 1) or tool holder.

Characteristic feature:
Tapered holow shank (HSK) with axial plane clamping mechanism according to DIN 69893. The most important advantages are as follows:

ISO taper DIN 2080 DIN ISO 7388-1	HSK form A/C/(E) DIN 69893 part 1	HSK form B/D/(F) DIN 69893 part 2
–	HSK 40	HSK 50
SK30	HSK 50	HSK 63
SK40	HSK 63	HSK 80
SK45	HSK 80	HSK 100
SK50	HSK 100	HSK 125

Association between ISO taper - hollow taper shank

• High static and dynamic rigidity

The radial and axial forces generated in the tool shank provide the clamping forse necessary for extreme rigidity (fig. 2). Recommended values for the GM-300 module for manual clamping.

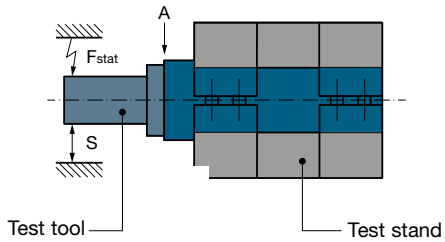

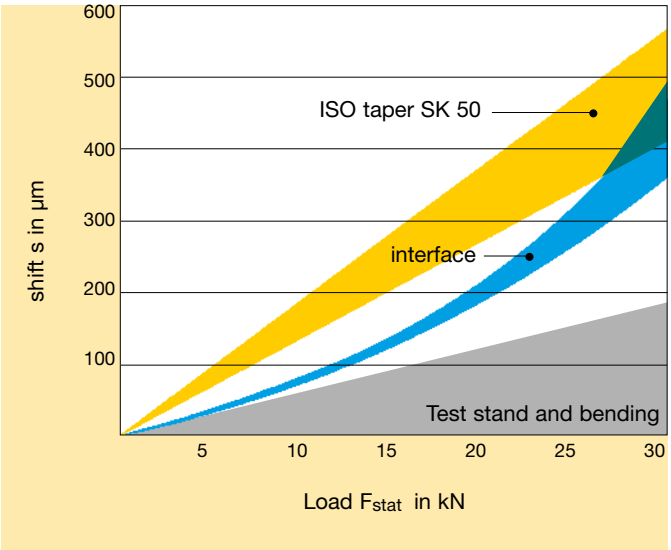

Fig. 2
Static deflection: Comparison between ISO taper 50 and automatic interface HSK-A 100 (A)

• High torque transmission and defined radial positioning

The wedging effect between the hollow taper shank and the holder or spindle causes a friction contact over the full taper surface and the plane supporting face (fig. 3). Two keys engage with the shank end of the tool holder and provide form-closed, radial positioning, thereby excluding any possible setting errors.

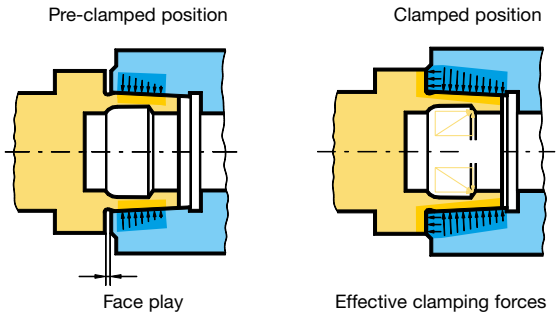

Fig. 3
Prestressing and frictional forces of hollow taper shank at the interface.

• High tool change accuracy and repeatability

The circular form engagement of the clamping claws within the hollow tool shqank provides a totally tight connection between the shank and spindle or holder respectively (fig. 3 and 4).

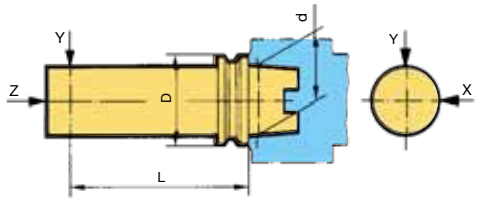

HSK-size D	d mm	L mm	X mm	Y mm	Z mm
32	24	50	0.002	0.002	0.002
40	30	60	0.002	0.002	0.002
50	38	75	0.002	0.002	0.002
63	48	100	0.002	0.002	0.002
100	75	150	0.002	0.002	0.002

Fig. 4
Radial and axial repeatability of interface for manual and automatic clamping

• High speed machining performance

The higher the number of revolutions the better, as this increases both the power and effectiveness of the locking of the clamping mechanism. The direct initial stress between the hollow taper shank and the spindle holder compensates for the spindle expansion generated by the centrifugal force so that there is absolutely no radial play (fig. 3). The plane clamping position prevents any slipping in the axial direction.

• Short tool changing time

Efficient tool change due to a short shank length (approx. 1/3 of the conventional ISO taper) and light weight (approx. 50% of the ISO taper).

• Simple, cost-efficient shank design

No moving components at the tool shank means no wearing parts.

• Insensitive to foreign matter

The uninterrupted design of the ring-shaped axial plane clamping simplifies the cleaning of the coupling. During automatic tool change compressed air provides ideal cleaning in the interface.

• Coding and identification

To allow for the attachment of common identification systems, a hole of 10 mm dia. and 4.5 mm depth is provided for the data media (coding chips) in the vicinity of the collar.

• Standardising of interface

The hollow taper shanks by GÜHRING are conform with ISO 12164-1/DIN 698936. Version form „E“ with access hole in taper for manual clamping.

• Coolant feed

The tools for automatic clamping, HSK-A and E, are designed for a central coolant feed by means of a duct. Tools with manual change behind the GM 300 interface also operate with a central coolant feed. The clamping elements are entirely sealed against the entry of coolant so that fouling is prevented.

• Installation of the coolant supply set

Coolant supply sets are to be ordered separately for all GM 300 modules. The installation of the coolant duct must be carried out by the user.

GENERAL OVERVIEW OF HSK SHANKS ISO 12164-1/DIN 69893

Form A ISO 12164-1/DIN 69893-1

HSK-sizes 25…160

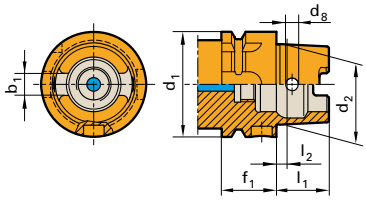

Form C ISO 12164-1/DIN 69893-1

HSK-sizes 25…160

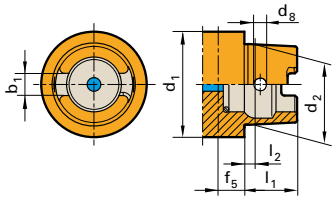

Form E DIN 69893-5

HSK-sizes 20…63

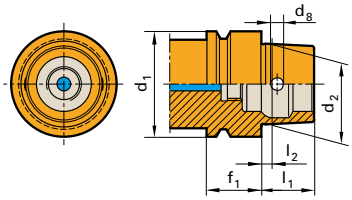

Form B DIN 69893-2

HSK-sizes 40…160

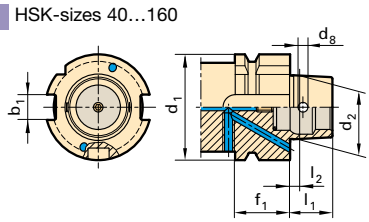

HSK for automatic tool change with gripper groove and index notch. Manual operation is via access hole in taper. Form B relies on driving dogs on the joint face as shank isn't slotted. Torque is transmitted through highly accurate connnection.

Form D DIN 69893-2

HSK-sizes 40…160

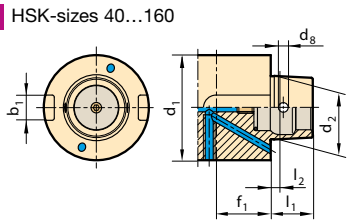

HSK for manual tool change. Operation is via access hole in taper. Form D relies on driving dogs on the joint face as shank isn't slotted. Torque is transmitted through highly accurate connnection.

Form F DIN 69893-6

HSK-sizes 50…80

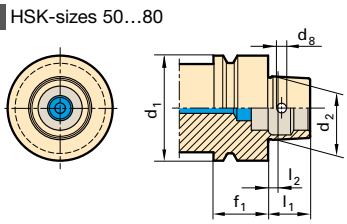

HSK for automatic tool change. Torque is transmitted through highly accurate connnection. Version with access hole acc. to DIN 69893-1 by arrangement. HSK-E/F by Gühring are supplied with access holes.

HSK form A C E							
Nominal Ø d_1 mm	d_2 mm	l_1 mm	l_2 mm	f_1 mm	f_5 mm	d_8 mm	b_1 mm
20	15.203	10	2.0	8	-	-	-
25	19.006	13	2.5	10	-	-	-
32	24.007	16	3.2	20	10.0	4.0	7.05
40	30.007	20	4.0	20	10.0	4.6	8.05
50	38.009	25	5.0	26	12.5	6.0	10.54
63	48.010	32	6.3	26	12.5	7.5	12.54
80	60.012	40	8.0	26	16.0	8.5	16.04
100	75.013	50	10.0	29	16.0	12.0	20.02
125	95.016	63	12.5	29	-	-	25.02
160	120.016	90	16.0	31	-	-	30.02

HSK form B F						
Nominal Ø d_1 mm	d_2 mm	l_1 mm	l_2 mm	f_1 mm	d_8 mm	b_1 mm
25	-	-	-	-	-	-
32	-	-	-	-	-	-
40	24.007	16	3.2	20	4.0	10
50	30.007	20	4.0	26	4.6	12
63	38.009	25	5.0	26	6.0	16
80	48.010	32	6.3	26	7.5	18
100	60.012	40	8.0	29	8.5	20
125	75.013	50	10.0	29	12.0	25
160	95.016	63	12.5	31	12.0	32

Because the rotational speed is the largest influencing factor together with the limits regarding the spindle or spindle bearing interface, the following r.p.m. limits for HSK interfaces have been recommended as guidelines within the HSK standards:

HSK-A/C 25	to 60.000 rev./min
HSK-A/C 32	to 50.000 rev./min
HSK-A/C 40	to 42.000 rev./min
HSK-A/C 50	to 30.000 rev./min
HSK-A/C 63	to 25.000 rev./min
HSK-A/C 80	to 20.000 rev./min
HSK-A/C 100	to 16.000 rev./min

THE AUTOMATIC TOOL CLAMPING

For the automatic interface the forces are introduced axially via a draw bar. A clamping taper simultaneously causes a radial movement of the clamping segments which, in turn, engage with the clamping shoulder of the tool shank and lock the coupling absolutely play-free. The clamping mechanism increases the draw-in force on the plane face by a factor of 3.5. General application in machining centers and turning centres using an automatic tool changing method. Such clamping systems are currently being offered by Messrs. Ott, Ortlieb, Berg and Röhm (fig. 6).

Fig. 6
Spindle interfaces with clamping devices

System Ott

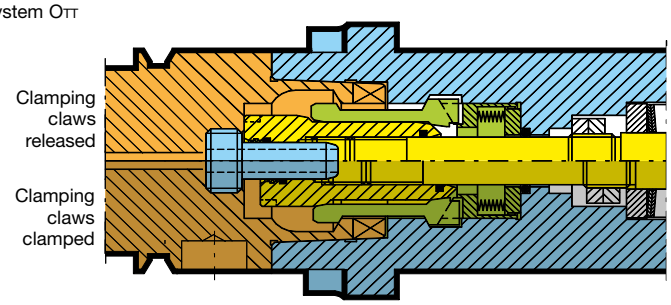

System Ortlieb (licence Fa. Gühring)

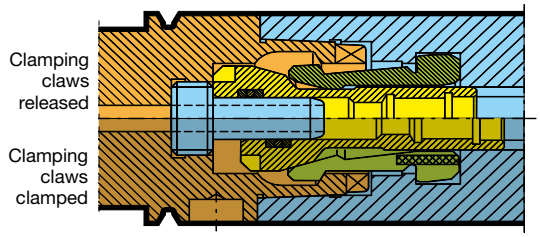

System Berg (licence Fa. Gühring)

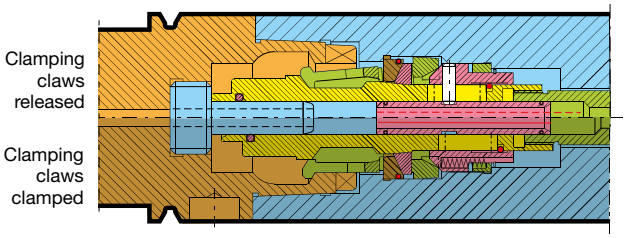

System Röhm (licence Fa. Gühring)

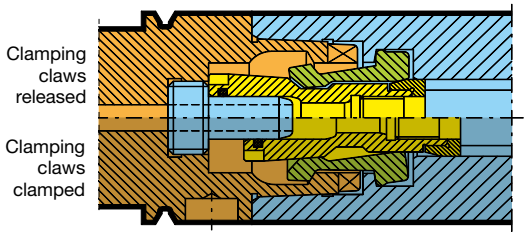

Term definitions of HSK-A interface for automatic tooling systems

① Gripper groove: circular groove

② Index notch: sickle-shaped notch across gripper groove

③ Keyway on collar: index notch or for attachment in tool magazine or grippers. With HSK-B/D also provides form closed torque transmission to spindle

④ Coding/identification: bore in collar for attachment of identification system (coding chip)

⑤ Thread for coolant: for attachment of coolant supply set

⑥ Keyway on taper shank: form closed torque transmission to spindle

⑦ Radial bore in taper shank: necessary for manual clamping systems

⑧ Clamping shoulder: circular chamfer for drawing in the tool

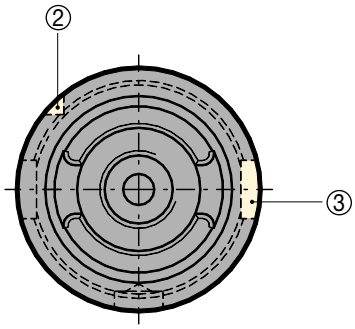

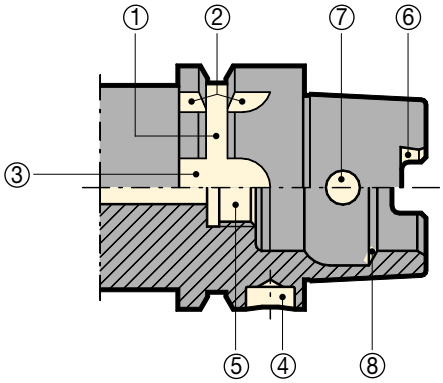

Note:
We like to point out, that HSK-A can be used alternatively to HSK-C with manual clamping systems e.g. 4-point clamping set or PowerClamp. The only difference is the overall length, which is slightly longer. That is why we have decided to have certain tool holders only as form C as standard.

Operating instructions for manual tool clamping

- Do not exceed the maximum torque figures for the clamping screw of the 4-point clamping set and the PowerClamp system.
- The thread of the clamping screw of the manual clamping set is supplied pre-greased. Following pro-longed operating periods it may be necessary grease otherwise the require clamping force cannot be obtained.
- At tool changing the plane surface and spindle has to be cleaned. Dirt will restrain the perfect function of the tool system. The inner taper of the spindle can be cleaned with cleaning unit, article no. 4914.
- The spindle should be sealed with a plug, article no. 4985, when running without tool to prevent impurities in the clamping sets and HSK tool systems.

Exemplary interface design

Short HSK adaptor article no. **4385** | 4-point clamping set article no. **4958** | HSK-C hydraulic chuck article no. **4267** | Reduction bush article no. **4368** | RT 100 F Ratio drill article no. **1662**

Spindle connection dimensions see page 276/277

Detailed drawings of the spindle connection contours are available on request for the following:

Article no. **4385** Short HSK adaptor	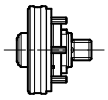	Article no. **4554** PowerClamp clamping set	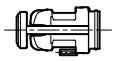
Article no. **4386** HSK adaptor (in front)	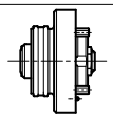	Article no. **4958** 4-point clamping set	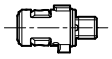
Article no. **4582** HSK adaptor (in front) for turning centres	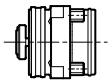	Article no. **4930** MQL 4-point clamping set	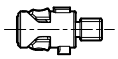
Article no. **4584** HSK adaptors (integrated axial plane)	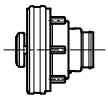	Article no. **4953** Brass collar	
Article no. **4586** HSK adaptor (in front)	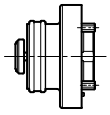	Article no. **4953** Brass collar	

TECHNICAL INFORMATION AND ADVANTAGES

Gühring has considerably expanded its ISO taper and MAS-BT tool holder program. Naturally, the tool holders are of the usual high Gühring quality. This means: ISO taper and MAS-BT tool holders are produced in a special, alloyed case hardened steel with a minimum tensile strength at the core of 900 N/mm2, hardened in a low distortion hardening process to HRC 58 at a case hardening depth of 0.8 to 1.0 mm. For reasons of longevity, the surface of the tool holder is subjected to an abrasive blasting process and protected against corrosion.

Quality through precision

Gühring's demand for highest precision also applies to tool holders. Therefore, ISO taper and MAS-BT chucks are precision ground: in the vicinity of the ISO taper to Ra ≤ 0.2, at the holder face to Ra ≤ 0.4. The taper tolerance is better than AT 3 with a measuring accuracy of ≤ 1µm.

Detailed information regarding the form and positional tolerances can be found for the individual tool holders on the respective pages in the catalogue. The tolerances of the holder bore and the spigot are approximately 2/3 of the DIN tolerance.

Balancing

Tool holders suitable for increased speeds are generally pre-balanced. For this purpose, we have determined the imbalance and entered the balancing areas as well as balancing bores on the drawings. This levels out the imbalance to a large extent and up to approximately 8000 rev./min precision balancing is unnecessary. For higher revolutions, the pre-balanced tool holders must be precision balanced to G 6.3 or G 2.5 respectively.

Type AD/AF

ISO taper tool holders generally produced are type AD/AF. Supplied is type AD, the coolant bores at the collar are sealed with screws.

General dimensions and tolerances

The following dimensions apply to our ISO taper and MAS-BT tool holders:

SK DIN ISO 7388-1
(old SK DIN 69871)

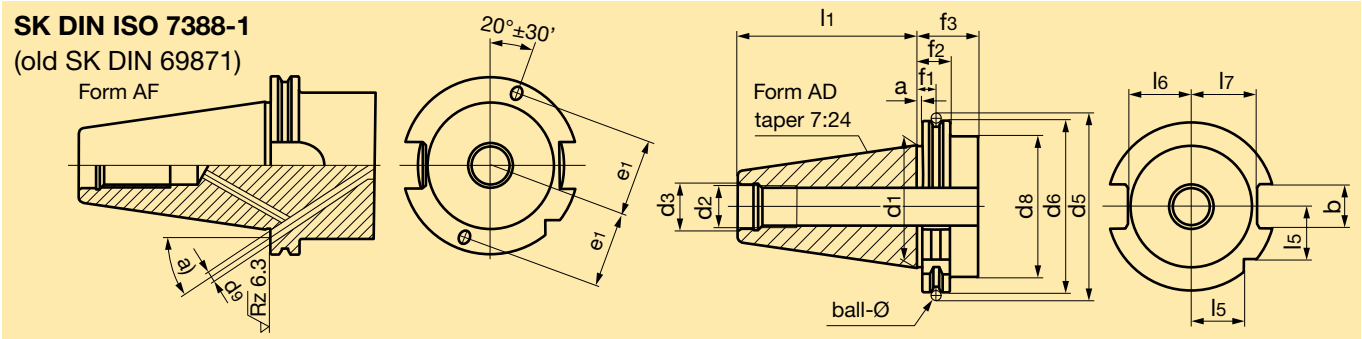

MAS/BT DIN ISO 7388-2
(corresponds MAS/BT JIS B 6339)

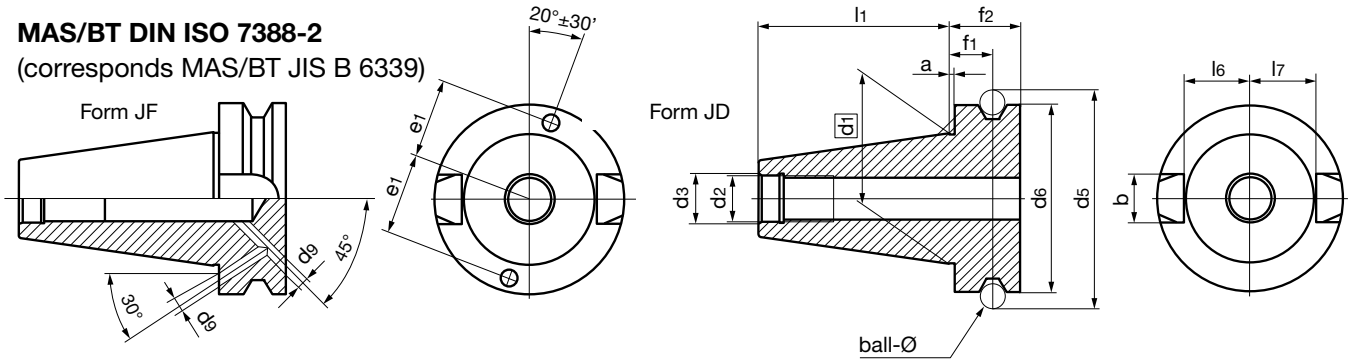

ISO taper	a mm	ball-Ø mm	b mm	d_1 mm	d_2 mm	d_3 mm	d_5 mm	d_6 mm	d_8 mm	d_9 mm	e_1 mm	f_1 mm	f_2 mm	f_3 mm	l_1 mm	l_5 mm	l_6 mm	l_7 mm
SK30	3.2	7	16.1	31.75	M12	13	59.3	50.00	45	4	21	11.1	19.1	35	47.80	15.00	16.4	19.0
SK40	3.2	7	16.1	44.45	M16	17	72.3	63.55	50	4	27	11.1	19.1	35	68.40	18.5	22.8	25.0
SK50	3.2	7	25.7	69.85	M24	25	107.25	97.50	80	6	42	11.1	19.1	35	101.75	30.0	35.5	37.7
BT30	2.0	8	16.1	31.75	M12	12.5	56.03	46.00	–	–	–	13.6	22.0	–	48.40	–	16.3	16.3
BT40	2.0	10	16.1	44.45	M16	17	75.56	63.00	–	4	27	16.6	27.0	–	65.4	–	22.6	22.6
BT50	3.0	15	25.7	69.85	M24	25	118.89	100.00	–	5.4	42	23.2	38.0	–	101.8	–	35.4	35.4

Imbalance
An imbalance produces a centrifugal force during the rotation of the spindle impeding the smooth running of the tool. This imbalance influences the working process and the life span of the spindle bearings.
The centrifugal force F increases linear with the imbalance U and squared with the number of revolutions according to the formula below.

Counter balancing
To compensate for unwanted centrifugal forces, the symmetrical distribution of mass must be restored with the aim of eliminating any centrifugal forces influencing the spindle bearing. Tool holders generally have compensation holes or areas which assist in directing the total amount of all centrifugal forces influencing the axis towards zero (see DIN ISO 21940-11).

Eccentricity of center of gravity
The imbalance of a spindle causes its center of gravity to deviate a certain distance from the rotating axis in direction of the imbalance. This distance is called rest-eccentricity e or eccentricity of center of gravity. The heavier the weight of the balance body mass m, the greater the rest-imbalance U permissible.

$$c = U \cdot \omega^2$$

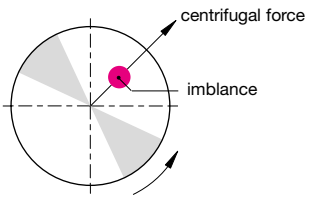

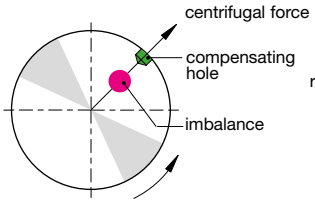

$$e = \frac{U}{m}$$

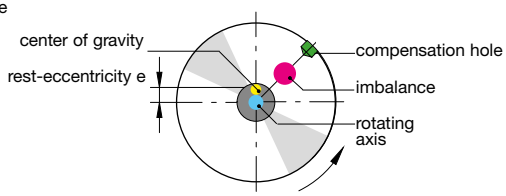

Calculation imbalance
Imbalance is a measure, specifying how much unsymmetrical distributed ass deviates radially from the rotating axis.

Imbalance is measured in gmm. The measure of distance e determines the distance of the center of gravity of an element to the rotating axis. Imbalance is calculated as follows:

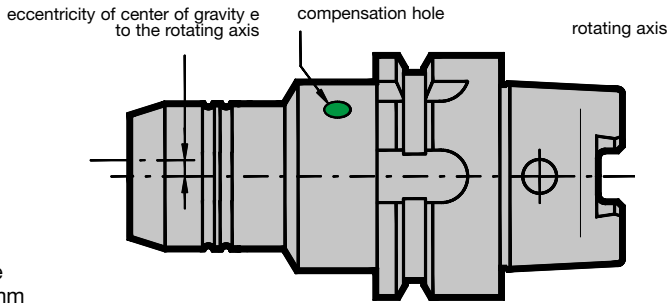

$$U = m \cdot e$$

c = centrifugal force
U = imbalance in gmm
e = eccentricity of center of gravity in µm
m = mass in kg
s = speed min-1
ω = angular velocity ($\omega = 2 \cdot \pi \cdot n$)

Balancing limits
In accordance with DIN ISO 21940-11 the balance grade is denoted with G as well as the units gmm/kg or µm respectively and is relative to the number of revolutions. At a speed of 15.000 rev./min and a weight of 1 kg, G6.3 corresponds with a permissible center deviation between rotational axis and center of gravity axis of the spindle of 4 µm.

At twice the speed of 30,000 rev./min it would be 2 µm. If the tool holder was only half the weight, i.e. 0.5 kg, the permissible counter balancing tolerance is also halved.
Aim of counter balancing is to find a compromise between the technically feasible and the economically efficient. Because the radial interchange accuracy for a brand-new HSK holder can be 2 to 3 µm and for an ISO taper shank holder can be 5 to 10 µm, it means an initial quality limit of G2.5 or G6.3 respectively at 10,000 rev./min.
The following diagram shows the quality grades to DIN ISO 21940-11, i.e. the permissible rest imbalance in relation to the balance body mass for different counter balance qualities G relative to the maximum operating speed.

Balancing machine

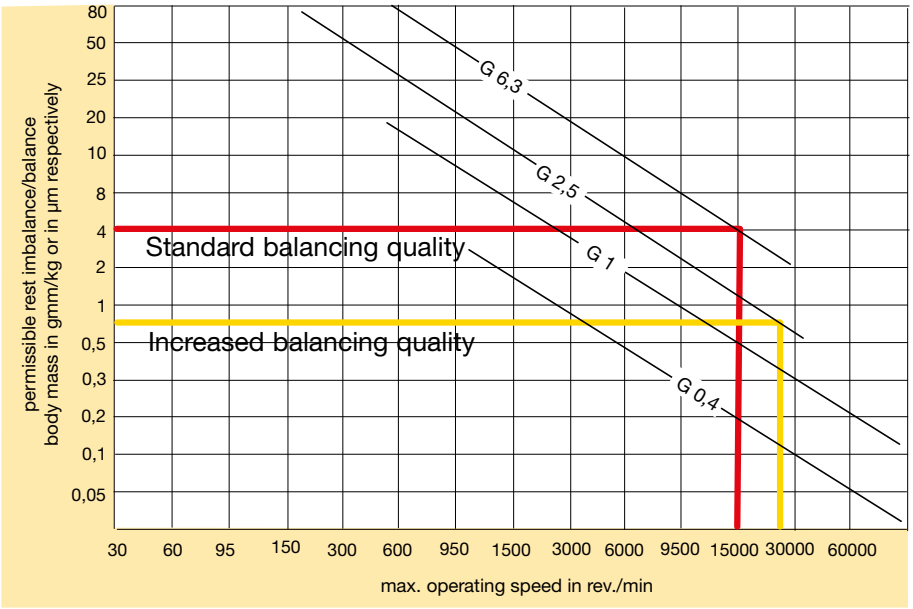

Gühring tool holders are balanced to G6.3/15,000 rev./min. As an option, i.e. when specified by the machine tool manufacturer, it is possible to precision balance including balancing protocol to a rest imbalance of 0.3 gmm.

Calculation the balancing grade total of the assembled system:

Spindle - tool holder - tool

Illustration of balancing grade total

$$IB_{total} = IB_{Spindle} + IB_{tool\ holder} + IB_{tool}$$

Example:

$$IB_{total} = IB_{Spindle\ (G\ 0.4)} + IB_{tool\ holder\ (G2.5)} + IB_{tool\ (G6.3)}$$

Calculation of rest imbalance

$$U = \frac{G \cdot 60}{2 \cdot \pi \cdot n} \cdot m$$

		m in g	U in gmm
IB Spindle	$= \frac{0{,}4 \cdot 60}{2 \cdot \pi \cdot 30.000} \cdot$	15.000 =	1,910
IB tool holder	$= \frac{2{,}5 \cdot 60}{2 \cdot \pi \cdot 30.000} \cdot$	1125 =	0,895
IB tool	$= \frac{6{,}3 \cdot 60}{2 \cdot \pi \cdot 30.000} \cdot$	215 =	0,431
	m total in g:	16.340	
	IB total in gmm:		3.236

Balancing grade conversion of the total system

$$G = IB_{total} \cdot 2 \cdot \pi \cdot \frac{n}{60 \cdot m_{total}}$$

Example:

$$G = 3{,}236\ gmm \cdot 2 \cdot \pi \cdot \frac{30.000 \cdot \frac{U}{min}}{60\ s \cdot 16340\ g} = 0{,}62$$

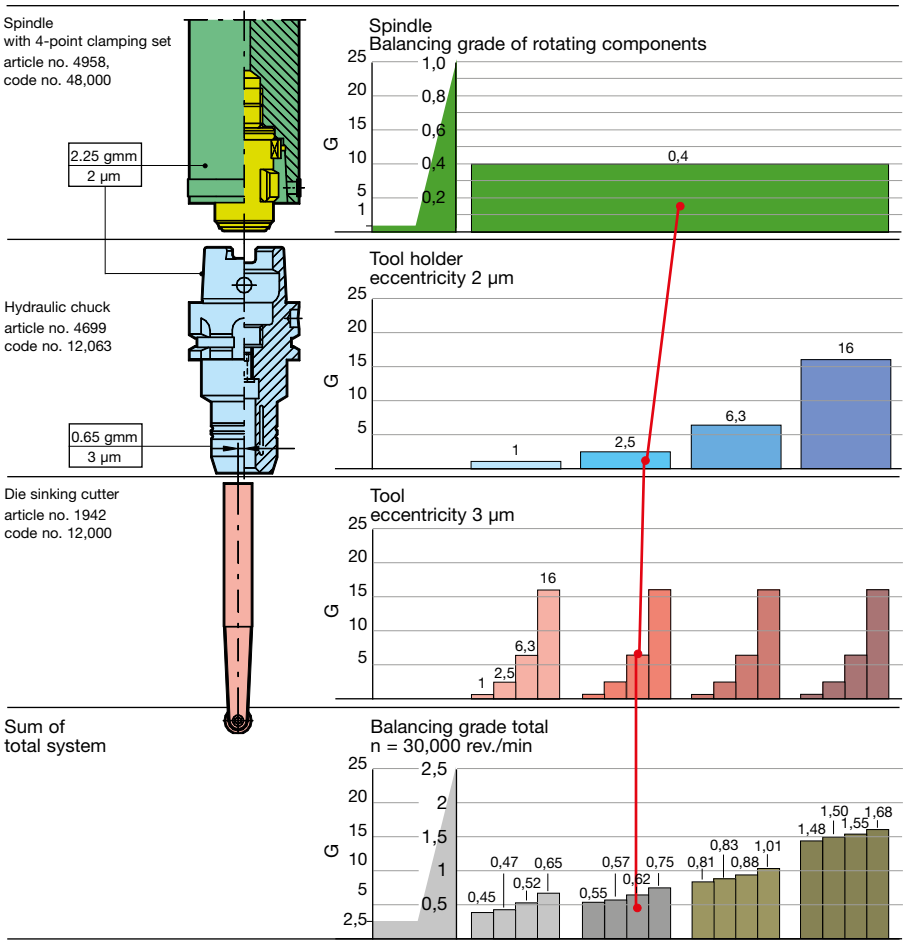

TECHNICAL INFORMATION AND ADVANTAGES

Gühring's shrink fit chucks ensure an optimal connection between shrink fit chuck and shank tool.
While some manufacturers use conventional case hardened steel, Gühring applies a special, application orientated tool steel. The result is an increased expansion rate as well as improved temperature adaptability. There is no limit to the number of shrink fit insertion or withdrawal operations.

Advantages:
- short shrink fit times
- maximum clamping force
- shrink fit chucks available for tool shank diameters from 3 mm to 32 mm
- longevity

These advantages are of particular interest in the field of HSC milling, difficult and rough cutting operations, drilling, reaming and internal grinding operations as well as for woodworking.

Convincing characteristics:
- excellent concentricity
- extreme clamping force and rigidity
- improved tool life
- insignificant imbalance through rotation symmetry
- economic efficiency

A gripping principle
When shrink fitting tools in shrink fit chucks, the decisive factors for ensuring the safe clamping of the tool in the tool holder are solely the heating and cooling of the tool holder. The heating process expands the shrink fit chuck enabling a tool to be inserted or withdrawn respectively. During the cooling process it contracts again and clamps the inserted tool with maximum clamping force.
Because the shrink fit chucks can become extremely hot in localised areas during the heating process and the tools shrink fitted for insertion or withdrawal respectively possess very sharp cutting edges, it is paramount that the operator wears Kevlar gloves during the shrink fit operation to prevent burns and cuts to the hands.

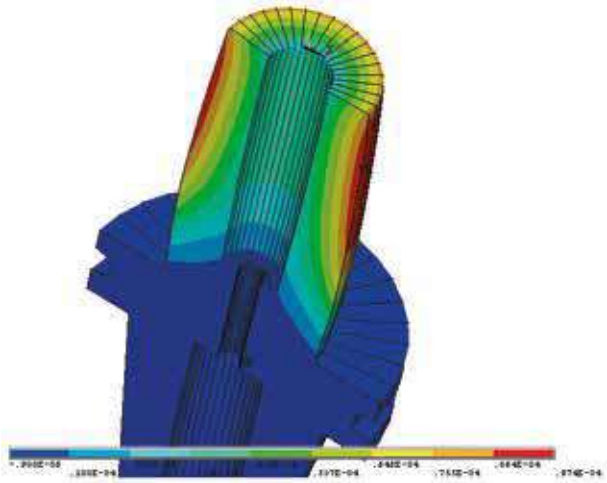

Shrink fit extensions: Increase performance
Shrink fit extensions increase the scope of a tool's performance and reduce tool surface imperfections. As with shrink fit chucks, the tool is clamped in the shrink fit extension and ideally in an hydraulic chuck. Naturally, shrink fit extensions can also be clamped in shrink fit chucks.

Perfect team: Gühring shrink fit chucks and shrink fit systems
For the shrink fitting for withdrawal and insertion of tools in our shrink fit chucks we offer various shrink fit systems to satisfy individual customer requirements: From high-tech solutions with integrated, highly accurate length pre-setting and special shrink fit systems for extra long tools to the multi-faceted GSS 2000 with various equipment options:

- GSS 5000
- GSS 3001
- HSV 2000
- GSS 2000

1. The HSK holder must be clean, free of swarf and undamaged.
2. Grease the O-rings prior to assembly.
3. Centrally insert the complete coolant supply set (coolant pipe, union nut and 2 O-rings) in the HSK with the assistance of the socket spanner. When inserting the MQL coolant supply unit, it is paramount to ensure that the MQL pipe is inserted centrally and undamaged into the MQL length setting screw (do not kink).
4. Screw in the coolant supply set/coolant supply unit and tighten (see table for torque figures)
5. Check coolant pipe for radial mobility.

Torque figures

for HSK	MA Nm
32	7
40	11
50	15
63	20
80	25
100	30

Installation of MQL coolant supply set article no. 4939

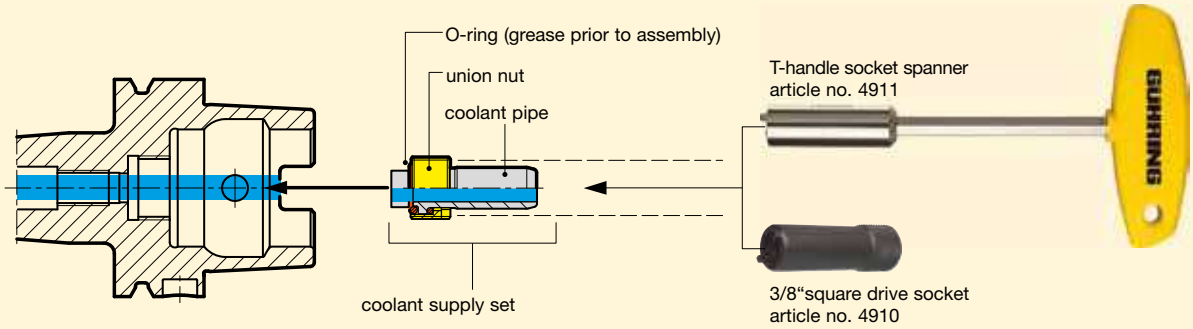

Installation of MQL coolant supply set filler article no. 4940

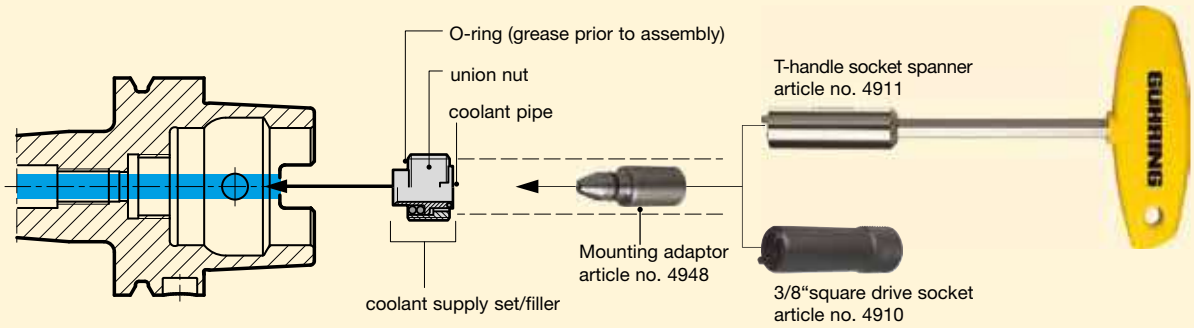

Installation of MQL coolant supply unit article no. 4623/4924

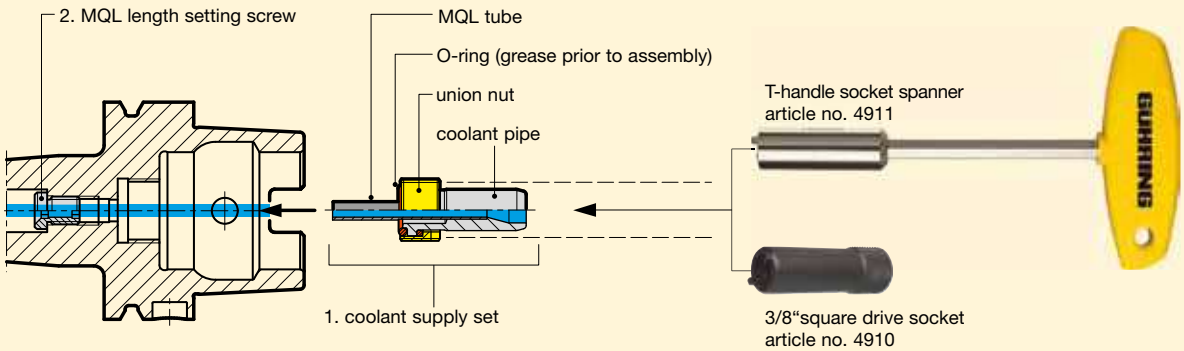

Clamping standard tool shanks to DIN 6535 in hydraulic chucks

Direct clamping
of tool preferred
run-out ≤ 0.003 mm

Form HA Ø 6 ... 20 mm

Form HA Ø 25 ... 32 mm

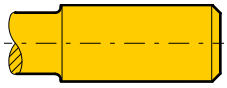

Form HB Ø 6 ... 20 mm

Clamping of tool shank
only with reduction bushes
run-out ≤ 0.005 mm

Form HB Ø 25 ... 32 mm

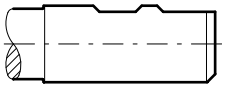

Form HE Ø 6 ... 20 mm

Form HE Ø 25 ... 32 mm

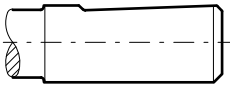

General notes:
Our hydraulic chucks must not be operated with motor-driven tools (impulse screwdrivers or similar). The hexagonal key should not exceed the key size over its entire length, this largely prevents excessive torque being transferred. We recommend the hexagon clamping key, article no. 4912. A tightening moment of 10 Nm must not be exceeded.

Gühring Hydraulic chucks with increased clamping force

Hydraulic chucks are suitable for clamping rotary symmetrical tools or workpieces. Straight shank tools without drive flats may be clamped up to Ø 32 mm, but also shanks according to DIN 6535 form HA and HB up to Ø 20 mm without reduction bushes. The given values in the table below are not to be exceeded. If the inserted length is less than the given minimum insertion depth or other tool shanks than specified above are applied, lower accuracy and breakage may occur!

Above all it is the high revolutions with High-Speed-Cutting operations that puts special demands on the tool holder. The clamping of the tool in a hydraulic chuck is, therefore, especially significant. Gühring has developed a hydraulic chuck that offers reliable and powerful clamping with higher torque figures, guaranteeing excellent tool clamping in the tool holder.

Combined with precise concentricity (max. 3 µm deviation from concentricity), a very fast and simple tool change as well as the vibration cushioning effect of the pressure chamber, the new hydraulic chuck can tackle the most demanding of machining tasks. The result is optimal tool life and excellent surface qualities or dimensional accuracy of the workpiece respectively.

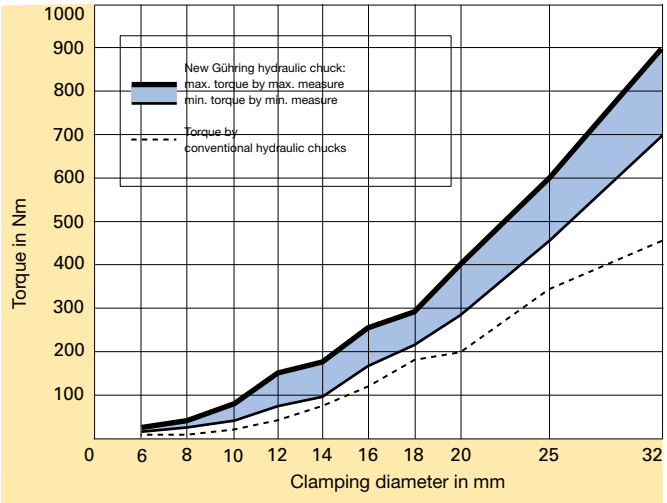

Considerably higher:
The clamping force of Gühring's new HSK-A hydraulic chuck in comparison to conventional chucks.

TECHNICAL INFORMATION AND ADVANTAGES

Modern machining processes place heavy demands on tool holding. Hydraulic chucks provide excellent clamping characteristics combined with precise concentricity. Furthermore, they enable a simple and fast tool change, with the assistance of a special extraction key.
Turning the pressure screw generates sufficient pressure in the pressure chamber resulting in an elastic deformation of the clamping bush, providing powerful tool clamping and precise concentricity. A safe and powerful fit is guaranteed. If reduction bushes are applied that are able to hold varying tool diameters, the tool application may be extended without problem. If such bushes are not applied, it is essential to observe the minimum clamping length!

A summary of the advantages:

- precise tool clamping with a maximum 3 µm deviation from concentricity
- transmission of high torque through (excellent clamping) optimised bush clamping system
- high speed compatibility (no centrifugal forces from clamping segments)
- precise concentricity, therefore excellent surface qualities and dimensional accuracy of the workpiece
- rapid tool change thanks to simple operation of the clamping screw
- optimal tool life
- hydraulic cushioning has vibration absorbing effect

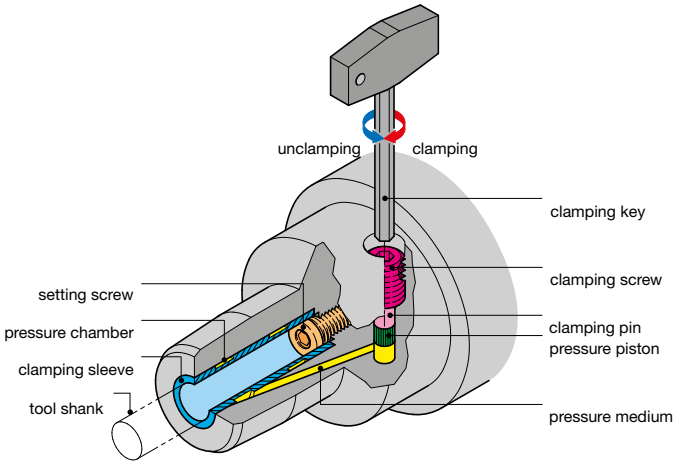

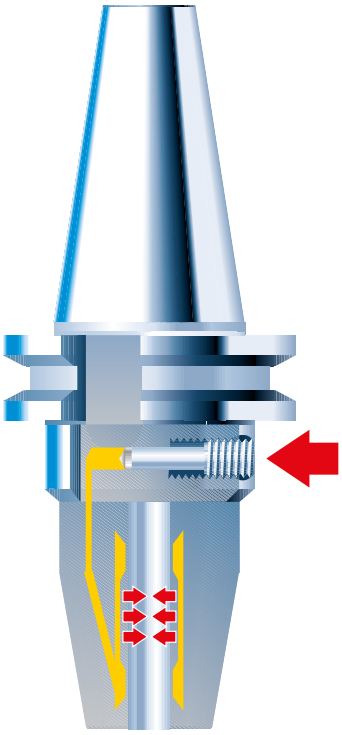

Convincing operation: the pressure medium is compressed via a screw and ensures safe positioning of the tool.

for shank-Ø in mm	**max. r.p.m. in 1/min**	max. transferable torque in Nm	min. insertion depth in mm	max. adjustment l_3 mm	max. rad. force F on chuck with 50 mm from the nose in N	operating temperature in °C	max. coolant pressure in bar
3 h6	50 000	2.5	27	7	25	20 - 50	80
4 h6	50 000	6	27	7	40	20 - 50	80
5 h6	50 000	10	27	7	65	20 - 50	80
6 h6	50 000	16	27	10	225	20 - 50	80
8 h6	50 000	26	27	10	370	20 - 50	80
10 h6	50 000	50	31	10	540	20 - 50	80
12 h6	50 000	82	36	10	650	20 - 50	80
14 h6	50 000	125	36	10	900	20 - 50	80
16 h6	50 000	190	39	10	1410	20 - 50	80
18 h6	50 000	275	39	10	1580	20 - 50	80
20 h6	50 000	310	41	10	1860	20 - 50	80
25 h6	25 000	520	47	10	4400	20 - 50	80
32 h6	25 000	770	51	10	6500	20 - 50	80

INSTALLATION DIMENSIONS FOR HSK ADAPTOR

Detailed production drawing on request

Short spindle adaptor (integr.) art. no. 4385

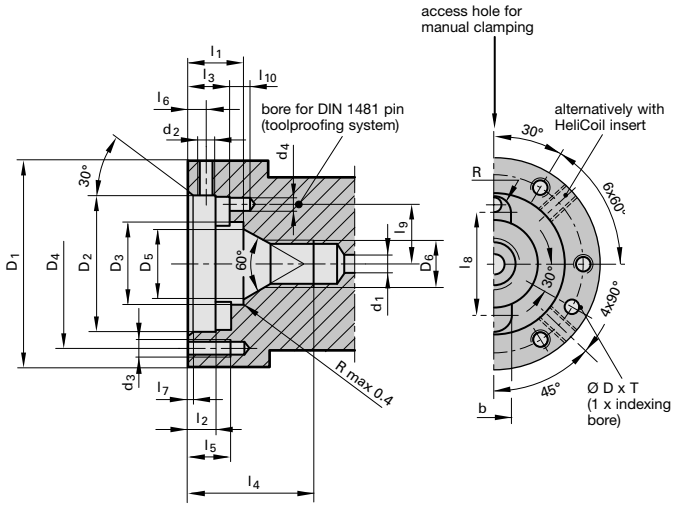

HSK adaptor (in front) art. no. 4386/4586

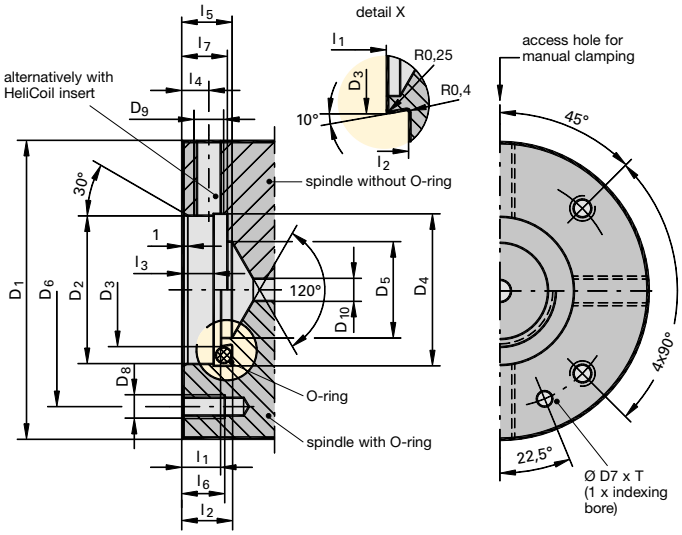

Short spindle adaptor (integr.) art. no. 4385

for HSK/Code no.	D1	D2	D3	D4	D5	D6	d_1	d_2	d_3	d_4
32 24,000	40	27.0	16.7	32.0	12.5	M 10	4.0	M 3	M 3	2
40 30,000	50	33.5	20.6	40.5	16.0	M 12	5.0	M 4	M 4	3
50 38,000	63	42.0	25.5	52.0	20.0	M 16	6.0	M 5	M 5	4
63 48,000	80	55.0	33.0	66.0	25.0	M 20	8.0	M 6	M 6	4
80 60,000	100	68.0	41.0	82.0	32.0	M 24	10.2	M 8	M 8	5

Short spindle adaptor (integr.) art. no. 4385 continuation

for HSK/Code no.	clamping depth l_1	l_2	l_3	l_4	l_5	l_6	l_7	l_8	l_9	l_{10}	b	R	D	T	locating pin DIN 1481
32 24,000	9.0	4.0	6.5	22	10	2.5	0.6	20.5	11.5	3.5	7.0	3.0	3.5	3.0	2 x 6
40 30,000	12.0	5.5	8.7	30	11	3.5	0.6	25.0	14.5	5.0	8.0	4.0	4.0	3.5	3 x 8
50 38,000	16.0	8.0	12.0	36	12	5.0	0.8	31.5	18.3	6.0	10.5	5.0	4.0	3.5	4 x 10
63 48,000	20.0	10.0	15.0	48	15	6.0	1.0	41.0	22.5	5.0	12.5	6.0	4.0	3.5	4 x 10
80 60,000	25.6	13.0	19.3	60	14	7.5	1.0	50.0	28.0	6.0	16.0	7.5	5.0	4.5	5 x 12

HSK adaptor (in front) art. no. 4386

for HSK/Code no.	D1	D2	D3	D4	D5	D6	D7	D8	D9	D10	l_1	l_2	l_3	l_4	l_5	l_6	l_7	T	O-ring
25 19,000	45	23	16.5	24	–	35	–	M5	M5	3.2	8.2	9.5	6.2	4.5	–	14	9	–	16x2
32 24,000	60	30	23.5	31	–	44	5	M5	M8x1	4.0	10.3	12.4	8.3	7.0	–	11	12	3.5	23x3
40 30,000	70	35	28.5	36	22	53	5	M6	M8x1	5.0	10.3	12.4	8.3	7.0	12	14	12	3.5	28x3
50 38,000	80	40	30.5	41	26	63	5	M6	M8x1	6.0	10.3	13.3	8.3	7.0	12	14	12	3.5	30x4
63 48,000	100	50	38.5	51	34	79	5	M8	M10x1	8.0	12.3	16.1	10.3	8.0	15	15	14	3.5	38x5
80 60,000	117	60	47.5	61	38	96	6	M8	M10x1	10.2	12.3	16.1	10.3	8.0	20	15	14	4.5	47x5

HSK adaptor (in front) art. no. 4586

for HSK/Code no.	D1	D2	D3	D4	D5	D6	D7	D8	D9	D10	l_1	l_2	l_3	l_4	l_5	l_6	l_7	T	O-ring
40 30,000	70	35	28.5	36	22	53	5	M6	M8x1	5.0	10.3	12.4	8.3	7.0	12	14	12	3.5	28x3
50 38,000	80	40	30.5	41	26	63	5	M6	M8x1	6.0	10.3	13.3	8.3	7.0	12	14	12	3.5	30x4
63 48,000	100	50	38.5	51	34	79	5	M8	M10x1	8.0	12.3	16.1	10.3	8.0	15	15	14	3.5	38x5
80 60,000	117	60	47.5	61	38	96	6	M8	M10x1	10.2	12.3	16.1	10.3	8.0	20	15	14	4.5	47x5
100 75,000	140	80	65.0	81	53	119	6	M10	M10x1	12.0	12.3	16.1	10.3	8.0	20	18	14	4.5	45x5

INSTALLATION DIMENSIONS FOR HSK ADAPTOR

Detailed production drawing on request

HSK adaptor (in front) art. no. 4581/4584

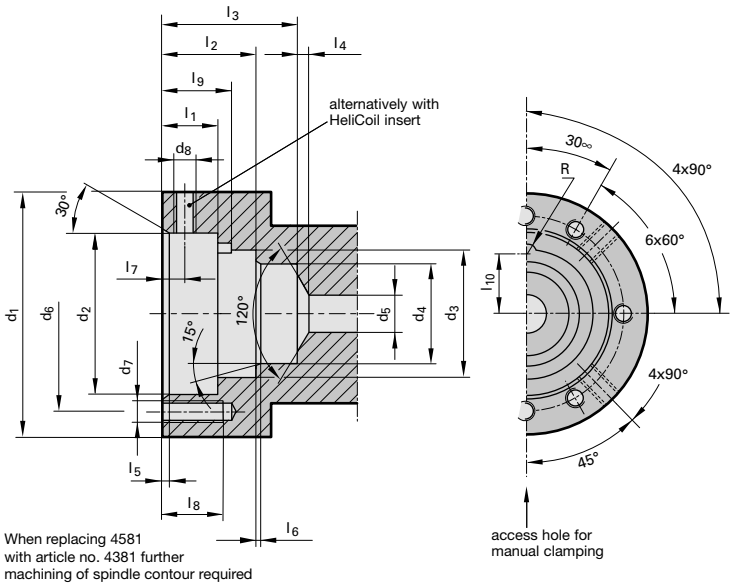

HSK adaptor (in front) art. no. 4582

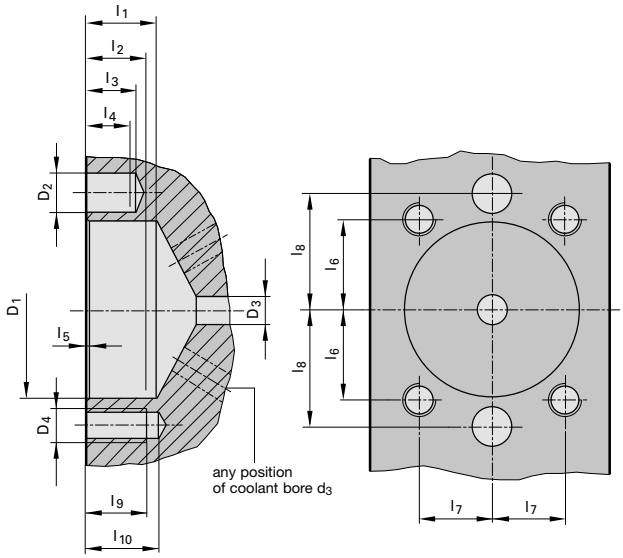

HSK adaptor (in front) art. no. 4581

for HSK/Code no.	d_1	d_2	d_3	d_4	d_5	d_6	d_7	d_8	l_1	l_2	l_3	l_4	l_5	l_6	l_7	l_8
25 19,000	45	23	-	-	5	35	M5	M4	6.8	-	-	1.5	1	-	3.5	min.8
32 24,000	55	28	21.12	17	6.4	43.5	M6	M4	6	9.75	16.75	2	1	0.6	3.5	11
40 30,000	63	36	26.4	21	8	51.5	M6	M4	7	11.3	19.9	2.5	1	1	4	12
50 38,000	80	46	33	26	10	65	M8	M5	9	14.7	25.5	3	1.5	1	5	12
63 48,000	100	56	42.5	34	16	81.5	M10	M6	12	17.8	30	3.5	1.5	1	6	16
80 60,000	125	66	52.8	42	16	103	M12	M8	14	22.7	39.8	4	2	1.5	8	16
100 75,000	160	86	66	53	20	130	M16	M10	16	27.4	49	4.5	2	2	10	16

HSK adaptor (in front) art. no. 4584

for HSK/Code no.	d_1	d_2	d_3	d_4	d_5	d_6	d_7	d_8	l_1	l_2	l_3	l_4	l_5	l_6	l_7	l_8	l_9	l_{10}	R
32 24,000	40	27.0	21.12	17	6.4	32.0	M 3	M 4	8.8	14.80	21.75	2.0	1.0	0.6	3.5	10.0	11.9	10.10	2.0
40 30,000	50	33.5	26.40	21	8.0	40.5	M 4	M 4	11.0	18.85	27.40	2.5	1.0	1.0	4.0	12.0	13.9	12.40	2.0
50 38,000	63	42.0	33.00	26	10.0	52.0	M 5	M 5	15.0	24.75	35.50	3.0	1.5	1.0	5.0	12.0	18.4	15.50	2.5
63 48,000	80	55.0	42.50	34	16.0	66.0	M 6	M 6	17.9	30.35	42.50	3.5	1.5	1.0	6.0	16.0	23.9	20.00	3.0
80 60,000	100	68.0	52.80	42	16.0	82.0	M 8	M 8	24.3	40.25	57.30	4.0	2.0	1.5	8.0	16.0	32.9	24.80	3.5
100 75,000	125	88.0	66.00	53	20.0	106.0	M10	M10	34.4	54.45	76.00	4.5	1.5	2.0	10.0	16.0	42.4	31.40	4.5

HSK adaptor (in front) art. no. 4582

for HSK/Code no.	d_1	d_2	d_3	d_4	l_1	l_2	l_3	l_4	l_5	l_6	l_7	l_8	l_9	l_{10}
50 38,000	50	7.95	10	M10	20.55	20	15	11	1	27.44	19.22	33.5	20	25
63 48,000	63	14.00	10	M12	25.00	21	18	16	1	31.70	26.00	41.0	22	26

Article no.	Tool	Page
4003	CAT / HSK-C basic adaptors	251
4038	Senso 3000	28/260
4050	MQL-Key 3000	105
4068	PQ 3000	261
4076	CC 3000	262
4077	CC 3000	262
4095	Reduction sleeves for floating holders	220
4096	Reduction sleeves for short floating holders	220
4097	Reduction sleeves for mini floating holders	221
4098	Floating holder with ER collet holder	218
4099	Extraction key for reduction bushes	28
4116	Floating ER Collet holder VDI DIN 69880-1	219
4117	Floating side lock holder VDI DIN 69880-1	219
4167	Floating side lock holder	217
4169	Floating, short side lock holder	217
4174	Floating, mini side lock holder	218
4175	Collet holder ER metallic sealed	187/222
4206	Quick change tapping chuck adaptors	90
4208	Extensions HPC	159
4209	MQL 1-channel hydraulic chucks HSK-A for manual tool change	98
4210	MQL 1-channel hydraulic chucks HSK-A for automatic tool change	99
4213	ISO taper hydraulic chucks with increased clamping force	23
4221	MAS/BT hydraulic chucks with increased clamping force	25
4222	CAT milling arbors	194
4230	GÜHROJET MAS/BT milling arbors	193
4231	GÜHROJET ISO taper milling arbors	192
4232	GÜHROJET HSK-A Weldon side lock holders	168
4233	Whistle Notch MAS/BT side lock holders	175
4234	GÜHROJET MAS/BT Weldon side lock holders	174
4235	Clamping sleeves for precision clamping chucks, sealed version	162
4236	GÜHROJET Clamping sleeves, imp., f. precision clamp. chucks	163
4237	Clamping sleeves, imp., f. prec. clamp. chucks, sealed version	164
4238	ISO taper morse taper holders	198
4239	BT morse taper holders	198
4240	MAS/BT drilling chucks with internal cooling	190
4241	Clamping screws	31
4242	ISO taper drilling chucks with internal cooling	190
4243	CAT precision clamping chucks	158
4244	MAS/BT precision clamping chucks	158
4245	MAS/BT collet holders	182
4267	HSK-C hydraulic chucks with increased clamping force	20
4295	HSK-C hydraulic chucks with radial length adjustment	21
4296	HSK-A hydraulic chucks with radial length setting	19
4297	Modul 4x4 HSK-A alignment adaptor	211
4298	MQL synchro tapping chucks HSK-A for manual tool change	112/136
4299	HSK-A hydraulic chucks with increased clamping force	17
4300	HSK-A precision clamping chucks	157
4301	ISO taper precision clamping chucks	157
4302	GÜHROJet Clamping sleeves, for precision clamping chucks	161
4303	HSK-C collet holders	179
4304	HSK-A collet holders	177
4305	MQL setting screws with internal cone for MQL synchro tapping chucks	138
4306	Retaining nuts, system DIN ISO 15488	188
4307	Collets DIN ISO 15488	185
4308	Tapping collets	86
4315	ISO taper length pre-setting adaptor	30
4316	Universal HSK length pre-setting adaptors	29
4317	GÜHROJET Weldon ISO taper side lock holders	172
4318	ISO taper collet holders	182
4319	Universal ISO taper length pre-setting adaptors	29
4320	HSK-A morse taper holders	197
4322	Whistle Notch ISO taper side lock holders	173
4323	HSK-C collet holders, sealed version	180
4324	HSK-A collet holders, sealed version	178

Article no.	Tool	Page
4326	Synchro tapping chucks with straight shank	85
4327	HSK-A synchro tapping chucks	85
4328	HSK-A Quick change tapping chucks with internal cooling	89
4329	HSK-A Weldon side lock holders	169
4330	MQL 1-channel synchro tapping chucks HSK-A for automatic tool change	112
4333	Whistle Notch HSK-C side lock holders	171
4334	Whistle Notch HSK-A Weldon side lock holders	170
4335	Sealing washers	189
4340	Quick change tapping chucks without internal cooling	88
4341	MQL 2-channel synchro tapping chucks HSK-A for automatic tool change	137
4342	Quick change tapping chucks with internal cooling	89
4343	HSK-A adaptors for tapping chucks	88
4346	HSK-A drilling chucks with internal cooling	189
4350	HSK-A/HSK-C extensions with MQL 4-point clamping sets	108/241
4351	HSK-C extensions	241
4355	HSK-A/HSK-C reductions	240
4360	Modul 4x4 hydraulic chuck flange	213
4361	HSK-A shell milling arbors	195
4362	GÜHROJET HSK-A milling arbors	191
4363	Modul 6x6 HSK adaptor flange	209
4364	Setting screws “face” synchro tapping chucks, int. cooling	84
4368	Reduction bushes, sealed, for hydraulic chucks	26
4369	GÜHROJET Reduction bushes for hydraulic chucks	27
4385	Short HSK spindle adaptors (integrated)	239
4386	HSK spindle adaptors (in front)	238
4387	ISO taper/HSK-C basic adaptor for spindles to DIN 2079	240
4397	HSK-E collet holders	181
4419	Cooling adaptor set, complete	60
4508	MQL 1-channel coolant supply set HSK-A	113
4511	MQL 2-channel coolant supply set HSK-A	139
4512	SK / HSK-C basic adaptors	250
4513	MQL coolant supply set HSK-A (filler)	113/139
4514	MAS/BT / HSK-C basic adaptors	250
4524	MQL hydraulic synchro tapping chucks with straight shank	111/135
4525	Straight shank hydraulic synchro tapping chucks for internal cooling	79
4549	HSK-A/HSK-C extensions	252
4551	Spring and threaded pin	247
4554	PowerClamp sets	247
4555	Threaded spindle	247
4557	Tensioning nut set	247
4576	ISO taper hydraulic synchro tapping chucks with internal cooling	77
4577	MAS/BT hydraulic synchro tapping chucks with internal cooling	78
4581	HSK adaptors (in front)	248
4582	HSK adaptors for turning centres	249
4584	Short HSK spindle adaptors (integrated)	249
4586	HSK spindle adaptors (in front)	248
4601	HSK-A hydraulic synchro tapping chucks with internal cooling	76
4602	MQL HSK-A 1-channel hydraulic synchro tapping chucks (for auto. tool change)	110
4603	MQL HSK-A 2-channel hydraulic synchro tapping chucks (for auto. tool change)	134
4604	MQL HSK-A hydraulic synchro tapping chucks (for manual tool change)	109/133
4605	Reduction bushes sealed for hydraulic synchro tapping chucks	80
4606	GÜHROJET reduction bushes for hydraulic synchro tapping chucks	82
4611	MQL 2-channel hydraulic chucks HSK-A for manual tool change	115
4612	MQL 2-channel hydraulic chucks HSK-A for automatic tool change	117
4613	MQL 2-channel shrink fit chucks HSK-A for manual tool change	119
4614	MQL 2-channel shrink fit chucks HSK-A for automatic tool change	123
4615	M contour clamping sets for MQL and IC	143/231
4616	Assembly / disassembly tool for M contour clamping sets	144/232
4617	Sealing lip for MQL 1-channel length setting screws	105
4618	HSK-A hydraulic chucks HMC 3000 for small clamping dia.	16
4619	ISO taper hydraulic chucks HMC 3000 for small clamping dia.	22
4620	MAS/BT hydraulic chucks HMC 3000 for small clamping dia.	24
4621	MQL 2-channel length setting screws for HSK-A	127
4622	MQL 2-channel coolant supply set HSK-A (filler)	129

Article no.	Tool	Page
4623	MQL 2-channel coolant supply set HSK-A	131
4624	Assembly / disassembly tool for M contour clamping sets	144/232
4709	Modul 4x4 taper alignment adaptor BT	212
4712	Modul 6x6 taper alignment adaptor BT	206
4713	Modul 4x4 HSK adaptor flange	214/238
4714	Modul 6x6 HPC clamping chuck flange	209
4715	Angle alignment units f. mod. flange/alignment adaptor 6x6/4x4	215
4716	Intermediate sleeves f. mod. flange/alignment adaptor 6x6/4x4	215
4717	Modul 6x6 shrink fit chuck flange	208
4718	Universal length setting adaptor	50
4719	Shrink fit extensions	49
4722	Modul 6x6 hydraulic chuck flange	207
4723	Modul 6x6 HSK-A alignment adaptor	205
4724	Modul 4x4 ISO taper alignment adaptor	212
4725	Modul 6x6 ISO taper alignment adaptor	206
4726	HSK-A shrink fit chucks TSG 3000	36
4727	ISO taper shrink fit chucks TSG 3000	43
4728	MAS/BT shrink fit chucks TSG 3000	47
4729	ISO taper shrink fit chucks GÜHROJET	46
4730	GSS 2000 Basic	62
4735	MQL 1-channel shrink fit chucks HSK-A for manual tool change	100
4736	HSK-A shrink fit chucks	37
4737	HSK-E shrink fit chucks	42
4738	ISO taper shrink fit chucks	44
4739	MAS/BT shrink fit chucks	48
4741	MQL 1-channel shrink fit chucks HSK-A for automatic tool change	102
4742	GSS 2000 Comfort version	58
4743	Induction coil	63
4744	GSS 2000 ISO taper holders	58
4745	GSS 2000 HSK holders	58
4747	SpeedCooler Cooling system	63
4748	System cart	59
4749	Tongs	59
4750	Protective gloves	60
4752	GSS 2000 Eco-Plus	61
4753	GSS 3001 induction shrink fit system	64
4755	HSK-A shrink fit chucks GÜHROJET with peripherical cooling	40
4758	HSK-C shrink fit chucks	41
4759	SpeedCooler Manager	63
4760	Modul 4x4 shrink fit chuck flange	213
4761	HSK holder carriers GSS 2000	61/62
4762	ISO taper holder carriers GSS 2000	61/62
4763	Swivel compartments for GSS 2000	59
4769	Limit stop collars	63
4900	Adjustment screws	31
4901	Adjustment screws for HSK-C collet holders	184
4902	Adjustment screws for HSK-A/HSK-E collet holders	184
4903	Clamping screws	176
4904	Adjustment screws	52/176
4905	Adjustment screws	176
4907	Screws DIN EN ISO 4762 (former DIN 912)	196
4908	Milling cutter retaining screws	196
4909	Socket wrenches for retaining screws	196
4910	Sockets	264
4911	Sockets	264
4912	Hexagon clamping keys	269
4913	Clamping key	183
4914	HSK cleaning mandrels	265
4915	Torque wrenches	268
4916	Socket/attachments	268
4918	Cylindrical cleaning mandrels	266
4919	MQL length pre-setting screws for the conversion	31/54
4921	Hexagon-socket offset screw keys	269
4922	Drive dog sets for shell milling arbors	196

Article no.	Tool	Page
4923	Feather keys DIN 6885 A	195
4924	MQL coolant supply sets HSK-A for the conversion	32/55
4925	Pull studs DIN 69872, form A	270
4926	Pull studs DIN 69872, form B	270
4927	Pull studs BT ISO 7388-3	271
4928	Pull studs BT ISO 7388-3	271
4930	GÜHROCLAMP MQL 4-point clamping sets for MQL and IC	141/229
4931	Spindle with clamping jaws	141/229
4932	Ejector with tube	141/229
4933	Retention spindles f. GÜHROCLAMP MQL 4-point clamp. sets	142/230
4934	Adaptor for GÜHROCLAMP MQL 4-point clamping sets	142/230
4935	Retention screw for GÜHROCLAMP MQL 4-point clamping sets	143/231
4937	MQL 1-channel length setting screws for HSK-A	104
4938	Adjustment screws for Gührojet shrink fit chucks	51
4939	MQL 1-channel coolant supply set HSK-A	106
4940	MQL 1-channel coolant supply set HSK-A (filler)	106
4941	Length adjustment screw for conventional cooling	52/108/214
4946	Tool setting fixture	267
4947	HSK cleaning cap	265
4948	Mounting adaptor for MQL HSK-A coolant supply sets HSK-A (filler)	107
4949	Coolant supply sets for conventional cooling	263
4953	Brass locking rings	253
4955	Data coding chip	263
4957	Component parts f. 4-point clamp. set art. no. 4958, separate	237
4958	4-point clamping sets for conventional cooling	237
4959	Component parts f. 4-point clamp. set art. no. 4958, set	237
4961	Pressure ball screws	253
4963	Torque supports	242
4968	Taper measuring gauge for HSK tool shanks	256
4969	Measuring gauges for HSK spindles	257
4970	Taper proofing bars ISO	258
4971	Taper proofing bars HSK	258
4973	Clamping force measuring instrument	259
4974	Clamping force measuring instrument	259
4975	Balancing masters for HSK spindles	258
4976	Centrifugal rings for short spindles to DIN 69002-3	252
4977	Shrink fit chuck length setting screw with axial force damping	51
4978	Measuring gauges for HSK clamping shoulders	257
4979	Coolant supply sets for conventional cooling with filter	263
4982	HSK-C blanks	199
4983	HSK-A blanks	199
4985	HSK-C sealing plugs	266
4987	Torque wrenches	268
4988	Torque wrenches	268
4989	Torque wrenches	268
4990	Tool setting fixture	267
4991	Interchangeable discs	267
4992	Taper inserts	30
4993	Plug inserts	30
4996	Assembly / disassembly tool for MQL and M contour clamping sets	145/233
	GSS 5000	68

GÜHRING

GÜHRING KG | Telephone: + 49 74 31 17-0 | Fax: + 49 74 31 17-21279

Herderstraße 50-54 | 72458 Albstadt | Germany | info@guehring.de | www.guehring.de

114 996/19025-I-20 • Printed in Germany • 2019